Town of Bridgewater

Finance Committee

June 15, 2022
7:00 PM
The meeting will be held virtually via Zoom.
To attend via video, click on the link below:
https://us06web.zoom.us/j/86711066536

To attend via phone, dial: 1(646) 876-9923
Meeting ID: 867 110 665 36

MEETING AGENDA

Disclosure: Pursuant to Section 20 of Chapter 20 of the Acts of 2021, An Act Relative to Extending Certain Covid-19 Measures Adopted During the State of Emergency, this meeting of the Town Council for the Town of Bridgewater will be fully remote and accessible to the public through remote participation to the greatest extent possible. There will be no in person attendance permitted. Citizens who wish to tune in to the meeting may do so via Zoom or Facebook Live.

A. Call to Order

B. Approval of Meeting Minutes

a) Minutes from 5/18/22

C. Public Comment

D. New Business

a) Order O-FY22-069 Water SDC System Development

b) Order O-FY22-070 Water Rates

c) Order O-FY22-071 End of Year Transfers

d) Order O-FY22-072 Acceptance of Howard Foundation Monies

e) Order O-FY22-073 Transfer Order BWPL Conservation and Preservation Historical Records - Library Project with Attachments

f) Order O-FY22-074 Transfer Order Stiles and Hart Parkland Improvement Project with CPA Application

E. Old Business

F. Additional Items for Discussion

G. Adjournment of Meeting

TOWN OF BRIDGEWATER

Finance Committee

Nathan Schofield, Chair
Eric Langone, Vice Chair
Julie Scleparis
Lea Wyatt
Suzi Robinson
Christopher Blunt
MJ Spagone
Rigobert Noel
Kathleen Martin

Academy Building - 66 Central Square
Bridgewater, MA 02324

Bridgewater Finance Committee
Minutes for the FinCom Meeting that Convened on May 18, 2022

Call to order: 7:13

Committee Members Present: Nathan Schofield, Julie Scleparis, Suzi Robinson, MJ Spagone, Kathleen Martin

Committee Members Not Present: Eric Langone, Lea Wyatt, Christopher Blunt, Rigobert Noel

Guests in Attendance: Michael Dutton – Town Manager, Anthony Sulmonte – Finance Director

Public Comment - None

Approval of Meeting Minutes – 5/4/2022

MJ Spagone motioned to approve the meeting minutes from 5/4/22 which was duly seconded. The motion was approved unanimously.

<u>New Business</u>

Order O-FY22-066: Transfer Order - Contractual Buyouts - ISD and Library
Contractual Buyouts for Retirements from ISD and Library.

Suzi Robinson motioned to recommend O-FY22-066 which was duly seconded. The motion was approved unanimously.

Order O-FY22-067: BFA Bargaining Contract Ratification
The Town Manager negotiated an agreement with the Bridgewater BFA, Local 2611, IAFF. A concurrent transfer request will fund the appropriation thereof.

MJ Spagone motioned to recommend O-FY22-067 which was duly seconded. The motion was approved unanimously.

Order O-FY22-068: Contractual Settlement BFA
Settlement of Bridgewater Firefighters Association IIAF Local 2611 FY2022-FY2024.

Kathleen Martin motioned to recommend O-FY22-068 which was duly seconded. The motion was approved unanimously.

Order O-FY23-006: CPA Reserve Accounts
To appropriate $50,350 for the payment of debt related to the Keith Homestead purchase from FY2023 estimated revenues.

Kathleen Martin motioned to recommend O-FY23-006 which was duly seconded. The motion was approved unanimously.

Next Meeting Date – 6/1

Adjourn - *MJ Spagone motioned to adjourn the meeting of the FinCom at 7:43 p.m. which was duly seconded. The motion was approved unanimously.*

Bridgewater Town Council

In Town Council, Tuesday, May 24, 2022

Council Order: O-FY22-069

Introduced By:	Town Manager
Date Introduced	May 24, 2022
First Reading:	May 24, 2022
Second Reading/Hearing:	
Amendments Adopted:	
Third Reading:	
Date Adopted:	
Date Effective:	

Order O-FY22-069

WATER (SDC) SYSTEM DEVELOPMENT CHARGES

Whereas, the Town Manager is recommending an increase in the SDC (System Development Charge) for both domestic and commercial property. This charge will be assessed to customers with expanding needs or new customers that connect to the Town's water system (Water Treatment Plant(s) and Water Delivery System - Waterlines). These demands require that the Water Department continuously invest in upgrades and improvements to our physical plant and our waterline delivery system. These charges will offset a portion of the current expansion and all other improvements to the Town's water system. These charges will be accounted for and segregated separately from all other Water Revenue and can and will only be used for Capital Improvements to the Water Treatment Plant(s) and Water Delivery System.

The charges are calculated based on the Buy-in Method (Equity Method) and the Equivalent Resident Method (ERU) so that new water customers and expanding demand from existing customers pay their fair share of the remaining life of the fixed assets (Equity) and that existing customers who expand are charged for the additional capacity that they require.

Therefore, Ordered that the Town Council vote to ratify the SDC Charges pursuant to the Buy-in and ERU methodology.

Committee Referrals and Dispositions:

Referral(s)	Disposition(s)
•	•

NOT FOR ACTION – FIRST READING ONLY

P.O Box 73, Harwich Port, Massachusetts 02646
PO Box 998, Jacksonville, North Carolina 28540
Telephone: 508.360.1378
www.municipalconsultants.net

May 17, 2022

Mr. Anthony Sulmonte
Finance Director
Town of Bridgewater
66 Central Square
Bridgewater, MA 02324

Dear Mr. Sulmonte,

This report and the accompanying System Development Charge (SDC) were prepared for the Town of Bridgewater Water Departmment to charge new customers requesting water service and current customers expanding their facilities. The SDC is based on the current net book value of the water department's fixed assets.

We have compiled the Systems Development Charge in accordance with applicable guidelines established by the American Water Works Association. This report completes our requirements to prepare the System Development Charge.

We wish to thank everyone who assisted us during this project.

Very truly yours,

Douglas W. Gardner
President

SUMMARY

The purpose of this study was to prepare the System Development Charge based on the current water fixed assets. We included the near complete water treatment facility in our calculations but no other long term and short term future capital improvements.

Introduction

The Town of Bridgewater Water Department has water related improvements that are needed to meet their current and future needs and demands. Customers expanding their needs or a new customer connecting to the system will be required to pay an amount equal to that already paid by the current customers towards the invested capital funds.

The single-family houses, condos, townhouses, etc. are expected to increase during the next five years. This requires that the department invest in expansion and improvement of the physical plant (water system). However, the current expansion and improvement of the water system is not being recovered, in part, through a System Development Charge. The purpose of this study is to calculate a SDC based on the Buy-in Method so that new water customers and expanding customers are paying their share of the remaining life of the fixed assets and existing customers who expand are charged for the additional capacity (ERU).

Recommendations

We recommend the department approve the recommended SDC and ERU charges presented on Exhibit 3, "System Development Charges".

There are two ways to charge for the SDC.

1. The Buy in Method or Equity Method.

The Buy in Method is a flat rate charge per dwelling that requires a 1" connection. Larger connection sizes will result in a larger SDC. Refer to Exhibit 1, "System Development Charge".

The recommended Buy in Method SDC is $3,482, rounded up to $3,500, for a 1" connection. Larger connections should be charged at the increased amount as shown on Exhibit 3. The amounts for the larger connections were calculated using the AWWA criteria for increasing connection sizes.

All dedicated fire services are charged a separate SDC based on connection size.

2. The ERU, "Equivalent Residential Unit"

The ERU method is based on the expansion of both domestic and commercial property. It can be used for the expansion of a dwelling, such as adding a new bedroom, a new bathroom, expansion of a restaurant etc. Expansion of services or an expansion of the number of living units for existing customers should be based on the ERU's, i.e., an increase in usage totaling more than 10 percent over a three year average or those who are expanding facilities.

The calculated ERU charge is $3,482 (rounded to $3,500), per addition based on the percent of one unit.

Enforcement of these provisions is dependent on the water district working closely with the Town of Raynham building department.

TOWN OF BRIDGEWATER WATER DEPARTMMENT
SYSTEM DEVELOPMENT CHARGE
FIXED ASSET LISTING

The fixed asset listing (Schedule 1) was prepared based on data received from the water department. The fixed assets study was prepared through June 30, 2021 and based on the district's audited financial statements. The fixed asset original cost was based on actual costs or estimated original cost. The fixed asset data was prepared to provide the original cost of the water fixed assets. The original cost includes $14,958,916 of current and future costs for the new water treatment facility.

Once the estimated original cost was determined, the depreciation was calculated based on the expected useful life of the fixed asset. Depreciation was based on the straight line method with a half-year's depreciation in the year of purchase and retirement.

The "Fixed Asset Listing Summary", Schedule 1, summarizes the fixed assets by type of asset and provides the original cost, accumulated depreciation, and net book value through June 30, 2021. The total original cost is $62,195,098 and the net book value totals $49,614,762.

The fixed asset data is the basis of the Buy-in method of calculating a SDC.

TOWN OF BRIDGEWATER, MASSACHUSETTS **Schedule 1**
WATER DEPARTMENT
FIXED ASSET SUMMARY **Fiscal Year** **2021**

	Description	Original Cost	Accumulated Depreciation	Net Book Value
1910	**LAND**	$3,745,700	$0	$3,745,700
1920	**BUILDINGS**	$579,000	$369,030	$209,970
1930	**PLANT, MAINS, ETC.**			
	Tanks and Standpipes	$2,412,650	$1,426,671	$985,979
	Mains	$33,315,914	$8,114,714	$25,201,200
	Hydrants	$1,488,395	$441,012	$1,047,383
	Valves	$0	$0	$0
	Wells	$255,632	$112,864	$142,768
	Total	$37,472,591	$10,095,262	$27,377,329
1940	**EQUIPMENT**			
	Equipment	$5,153,858	$1,834,905	$3,318,953
	TOTAL EQUIPMENT	$5,153,858	$1,834,905	$3,318,953
1950	**VEHICLES**	$285,033	$281,139	$3,894
1990	**CONSTRUCTION IN PROGRESS**	$14,958,916	$0	$14,958,916
	TOTAL	$62,195,098	$12,580,335	$49,614,762

TOWN OF BRIDGEWATER WATER DEPARTMMENT
SYSTEM DEVELOPMENT CHARGE
Exhibit 1

BUY-IN METHOD (Equity Method)

The "Buy-in Method" is calculated based on the cost to connect to the current water system. Adjustments for the distribution system costs, debt service principal outstanding, and similar local facilities serving existing customers are deducted from the total cost because they are classified as maintenance type costs, not facility costs.

The "System Development Charge - Buy in Method, Exhibit 1, is the basis for calculating the SDC based on an equivalent meter size for existing capacity.

The fixed asset costs are listed by types of asset group summarized from Schedule 1, Fixed Asset Listing and Depreciation. The estimated net book value is $49,614,762 as of June 30, 2021.

The amounts that represent the all facilities' net book value, i.e., "Net Investment in Back Up Plant" represents Total Cost less Net Cost (local facilities). The local facilities ($685,147) represent water mains (6" and under), valves and hydrants ($1,047,383), that service customers directly and are not included in the calculation of the facilities that all customers use jointly. The Net Investment in Back Up Plant is $47,882,233.

The “Outstanding Bonds” that represent facilities that service customers directly are also deducted from the total. The outstanding principal debt is $15,019,920 and includes new and anticipated debt associated with the new treatment facility.

The “Total Equity Investment” is calculated by subtracting the outstanding bonds from the Net Investment in Back Up Plant. The Total Equity Investment is $32,862,313.

The "Number of Customers" was based on the total customers from the FY 2023 water rate study and totals 7,835.

The "Equivalent Units" are calculated based on 9,437 Equivalent Units for current customers and an estimated 0 for future customers based on the equivalent units.

The "Average Net Equity Investment for a 1"connection is obtained by dividing the "Total Equity Investment" by the "Equivalent Units", which results in $3,482, rounded to $3,500 per equivalent unit.

The SDC for each water service base on connection size has been calculated for a 1” connection up to a 12-inch connection. The basic charge is $3,500 for a 1” connection.

BRIDGEWATER WATER DEPARTMENT **Exhibit 1**
SYSTEM DEVELOPMENT CHARGE CALCULATION

	Original Cost	Accumulated Depreciation	Net Book Value
Land	$3,745,700	$0	$3,745,700
Building	$579,000	$369,030	$209,970
Mains - 6" and less	$1,245,919	$560,772	$685,147
Mains - 8" and over	$32,069,995	$7,553,942	$24,516,053
Tanks	$2,412,650	$1,426,671	$985,979
Well	$255,632	$112,864	$142,768
Machinery & Equipment	$5,153,858	$1,834,905	$3,318,953
Hydrants	$1,488,395	$441,012	$1,047,383
Vehicles	$285,033	$281,139	$3,894
Construction. in Progress	$14,958,916	$0	$14,958,916
Total	$62,195,098	$12,580,335	$49,614,762
Less: Distribution System			
Mains and Valves 6" Less			$685,147
Hydrants			$1,047,383
All Facilities Net Investment			$47,882,233
Less: Outstanding Bonds			$15,019,920
Total Equity Investment			$32,862,313
Number of Customers			7,835
Total Equivalent Units			9,437
Average Net Equity Investment 1" Service			$3,482

Connection Size	Flow Factor Equivalent	SDC
1"	1	$3,482
1 1/2"	5	$17,411
2"	8	$27,858
3"	16	$55,717
4"	25	$87,057
6"	50	$174,114
8"	80	$278,583
10"	115	$400,463
12"	155	$539,754

TOWN OF BRIDGEWATER WATER DEPARTMMENT
SYSTEM DEVELOPMENT CHARGE
Equivalent Residential Units (ERU'S)
Exhibit 2

The Equivalent Residential Units method is based on the estimated cubic feet per day (CFPD) of water consumed by a single-family residence.

The average family of three persons results in 23.47 cubic feet per day (CFPD) of water usage. The CFPD is detailed on Exhibit 2. The total billable flow from the FY 2023 rate study totaled 67,126,000 cubic feet annually divided by 365 days results in 183.907 CFPD. The customer base is 7,835 customers. The daily household consumption of 23.47 CFPD divided by the average household of 3 customers results in 7.82 cubic feet daily.

Calculation of the ERU's,
The "Calculation of the ERU's" was calculated as follows:

The total equity investment of $32,862,313 was obtained from Schedule 1.

The average daily consumption of 183.907 CFPD was based on total metered consumption. The total equity investment of $32,862,313 divided by CFPD, results in a total cost of $178.69 per ERU.

The cost per residential unit is $4,194.30 (23.47 CFPD x $178.69 per ERU).

The cost per residential unit can now be used to calculate the cost per meter size or cost per water usage by type of customer.

The ERU's is an estimate of water usage volume in the Town of Bridgewater Water Departmment. The estimates of water usage per day were obtained from a national publication, Plumbing Design & Installation Details, Page 51, Table 4.5a, "Design Criteria for Daily Water Requirements based on Building Occupancy." We have calculated the most common types of businesses; however, the list is not intended to be all-inclusive (Exhibit2).

One of the requirements for new connections is to estimate usage requirements before a permit is issued. This is expressed in ERU's. The appropriate impact fee can then be calculated.

BRIDGEWATER WATER DEPARTMENT **Exhibit 2**

Equivalent Residential Units

Calculation of Cubic Feet per Day

Annual Consumption (cubic feet)	67,126,000
Days in Year	365
Average Daily Consumption	183,907
Customers	7,835
Consumption per household per day	23.47
Average Household	3
Consumption per person per day	7.82

Calculation of Equivalent Residential Units (ERU's)

Average Daily Consumption	183,907
Total Equity Investment	$32,862,313
Total Cost per ERU	$178.69
Consumption per household, per day	23.47
Cost per Residential Unit	$4,194.30

Bridgewater Town Council

In Town Council, Tuesday, May 24, 2022

Council Order: O-FY22-070

Introduced By:	Town Manager
Date Introduced	May 24, 2022
First Reading:	May 24, 2022
Second Reading/Hearing:	
Amendments Adopted:	
Third Reading:	
Date Adopted:	
Date Effective:	

Order O-FY22-070

WATER RATES

Whereas, the Town Manager is recommending an increase in the Metered Consumption Charge and Quarterly Minimum Charge to cover the cost of the debt service and the operating costs for the "New High Street Water Treatment Facility". This requires that the Revenue from Water User Charges generate $1,500,000 in revenue over what is currently being generated – from approximately $3,300,000 to $4,800,000. To achieve this the Metered Consumption Charge is to be increased by 24%, coupled with an increase to the Quarterly Minimum Charge. The Quarterly Minimum Charge increase will be dependent upon the meter size.

A summary of the recommended increase to the quarterly Minimum Charge and the Metered Consumption Charges are attached.

Therefore, Ordered that the Town Council vote to ratify the increase in the Metered Consumption Charge and Quarterly Minimum Charge.

***Explanation*:** The Town of Bridgewater is obligated to pay the principal and interest on the previously authorized debt for the construction of the town's "New High Street Water Treatment Facility" which will be going online this coming fall.

Committee Referrals and Dispositions:

Referral(s)	Disposition(s)
•	•

NOT FOR ACTION – FIRST READING ONLY

TOWN OF BRIDGEWATER,MA						Exhibit 1
Current vs Proposed Rates & Charges						
Water Division	Current Rates	Proposed Water Rates				
	FY 2022	FY 2023	FY 2024	FY 2025	FY 2026	FY 2027
Minimum Charge - Quarterly						
Up to 1"	$12.50	$25.00	$25.00	$25.00	$25.00	$25.00
1"	$12.50	$75.00	$75.00	$75.00	$75.00	$75.00
1 1/2"	$12.50	$125.00	$125.00	$125.00	$125.00	$125.00
2"	$12.50	$200.00	$200.00	$200.00	$200.00	$200.00
3"	$12.50	$400.00	$400.00	$400.00	$400.00	$400.00
4"	$12.50	$625.00	$625.00	$625.00	$625.00	$625.00
6"	$12.50	$1,250.00	$1,250.00	$1,250.00	$1,250.00	$1,250.00
Meter Water Charges - Quarterly - per 100 CF						
1st Step 1-1,500 CF	$2.81	$3.48	$3.48	$3.48	$3.48	$3.48
2nd Step 1,501-10,000 CF	$5.94	$7.37	$7.37	$7.37	$7.37	$7.37
3rd Step Over 100,000 CF	$7.28	$9.03	$9.03	$9.03	$9.03	$9.03
Private Fire Protection - Annual Charge						
Hydrant	$250.00	$475.00	$475.00	$475.00	$475.00	$475.00
2"	$40.00	$75.00	$75.00	$75.00	$75.00	$75.00
3"	$80.00	$150.00	$150.00	$150.00	$150.00	$150.00
4"	$125.00	$250.00	$250.00	$250.00	$250.00	$250.00
6"	$250.00	$475.00	$475.00	$475.00	$475.00	$475.00
8"	$400.00	$750.00	$750.00	$750.00	$750.00	$750.00
10"	$580.00	$1,000.00	$1,000.00	$1,000.00	$1,000.00	$1,000.00
Backflow Prevention						
First Device Tested	$75.00	$75.00	$75.00	$75.00	$75.00	$75.00
Second Device	$25.00	$50.00	$50.00	$50.00	$50.00	$50.00
Fittings	$2.00	$5.00	$5.00	$5.00	$5.00	$5.00

Bridgewater Town Council

In Town Council, Tuesday, June 7, 2022

Council Order: O-FY22-071

Introduced By:	Town Manager
Date Introduced	June 7, 2022
First Reading:	June 7, 2022
Second Reading/Hearing:	
Amendments Adopted:	
Third Reading:	
Date Adopted:	
Date Effective:	

Order O-FY22-071

END OF YEAR TRANSFERS

ORDERED; pursuant to Section 6-4 of the Town of Bridgewater Charter, that the Town Council of Bridgewater, Massachusetts in Town Council assembled vote to appropriate and transfer the amounts from below schedule Source of Funds to below schedule of Use of Funds:

Dept	Description	Group	Amount
Source of Funds			
111	TOWN COUNCIL	2-Expenses	(11,000.00)
131	FINANCE COMMITTEE	1-Salary/Wages/Benefits	(2,000.00)
131	FINANCE COMMITTEE	2-Expenses	(900.00)
132	FINANCE RESERVE FUND	2-Expenses	(60,000.00)
135	FINANCE - ACCOUNTING	2-Expenses	(9,000.00)
155	INFORMATION TECHNOLOGY	2-Expenses	(30,000.00)
161	TOWN CLERK	2-Expenses	(10,000.00)
182	CED	1-Salary/Wages/Benefits	(45,000.00)
192	TOWN BUILDINGS	1-Salary/Wages/Benefits	(45,000.00)
192	ENERGY FUND - OFS	Other Funding Sources	(100,000.00)
210	POLICE	1-Salary/Wages/Benefits	(90,000.00)
240	INSPECTIONAL SERVICES	1-Salary/Wages/Benefits	(35,000.00)
410	TOWN ENGINEER	1-Salary/Wages/Benefits	(24,000.00)
410	TOWN ENGINEER	2-Expenses	(33,000.00)
420	HIGHWAY	1-Salary/Wages/Benefits	(115,000.00)
420	HIGHWAY	2-Expenses	(75,284.00)
420	HIGHWAY-Road Bond - OFS	Other Funding Sources	(34,534.00)
424	STREET LIGHTING	2-Expenses	(112,490.00)
543	VETERAN'S SERVICES	2-Expenses	(65,147.00)
630	RECREATION	1-Salary/Wages/Benefits	(5,200.00)
913	UNEMPLOYMENT	1-Salary/Wages/Benefits	(5,000.00)
914	MDCR/HEALTH/LIFE INSURANCE	1-Salary/Wages/Benefits	(42,000.00)
Source of Funds Total			**(949,555.00)**

NOT FOR ACTION – FIRST READING ONLY

Dept	Dept Description	Group	Amount
		Use of Funds	
123	TOWN MANAGER	1-Salary/Wage/Benefits	62,000.00
123	TOWN MANAGER	2-Expenses	65,000.00
135	FINANCE - ACCOUNTING	1-Salary/Wage/Benefits	9,000.00
141	FINANCE - ASSESSOR	2-Expenses	4,000.00
145	FINANCE - TREASURER-COLLECTR	1-Salary/Wage/Benefits	15,000.00
145	FINANCE - TREASURER-COLLECTR	2-Expenses	15,311.00
151	LEGAL	1-Salary/Wage/Benefits	500.00
151	LEGAL	2-Expenses	5,000.00
161	TOWN CLERK	1-Salary/Wage/Benefits	6,620.00
192	TOWN BUILDINGS	2-Expenses	181,000.00
210	POLICE	3-Capital	57,000.00
220	FIRE	1-Salary/Wage/Benefits	170,000.00
220	FIRE	2-Expenses	29,647.00
292	ANIMAL CONTROL	1-Salary/Wage/Benefits	1,500.00
301	BRISTOL AGRICULTURAL	2-Expenses	3,100.00
303	NORFOLK COUNTY AGRICULTURAL	2-Expenses	54,500.00
420	HIGHWAY	3-Capital	65,000.00
510	HEALTH	1-Salary/Wage/Benefits	1,500.00
541	COUNCIL ON AGING	1-Salary/Wage/Benefits	20,774.00
610	LIBRARY	1-Salary/Wage/Benefits	40,000.00
610	LIBRARY	2-Expenses	5,852.00
630	RECREATION	2-Expenses	7,000.00
710	DEBT SERVICE	4-Debt Service	1.00
912	WORKERS COMP	1-Salary/Wage/Benefits	3,300.00
919	OTHER BENEFITS - HR	1-Salary/Wage/Benefits	1,700.00
919	OTHER BENEFITS - HR	2-Expenses	38,000.00
945	LIABILITY INSURANCE	2-Expenses	11,000.00
950	GAS & OIL	2-Expenses	76,250.00
Use of Funds Total			**949,555.00**
			0.00

Committee Referrals and Dispositions:

Referral(s)	Disposition(s)
•	•

Bridgewater Town Council

In Town Council, Tuesday, June 7, 2022

Council Order: O-FY22-072

Introduced By:	Town Manager
Date Introduced	June 7, 2022
First Reading:	June 7, 2022
Second Reading/Hearing:	
Amendments Adopted:	
Third Reading:	
Date Adopted:	
Date Effective:	

Order O-FY22-072

ACCEPTANCE OF GIFT HOWARD FOUNDATION FOR COUNCIL ON AGING

ORDERED; that the Town Council assembled vote to:

WHEREAS: Massachusetts General Laws, Chapter 44, §53A, states as follows:

"An officer ... of any city or town … may accept grants or gifts of funds from … from the commonwealth … or an agency thereof, … and may expend such funds for the purposes of such grant or gift ... with the approval of the city manager and city council...;" and

WHEREAS: The Town of Bridgewater has received a financial gift from Home for Aged Men in the City of Brockton, also known as the Howard Foundation to be expended by the Office of Elder Affairs.

Now, therefore, in accordance with Chapter 44, §53A of the Massachusetts General Laws, the Town Council votes to take the following action:

ORDERED that the Town Council of Bridgewater, Massachusetts in Town Council assembled vote to accept the gift of $10,000.00 from the Home for Aged Men, also known as the Howard Foundation, to expend the gift in accordance with stated purpose thereof.

Explanation:
The Elder Affairs Director has requested and secured this additional funding assistance for senior programs. This foundation has continuously and generously supported various programs consistently over the last several years of which the Senior community is most grateful.

Committee Referrals and Dispositions:

Referral(s)	Disposition(s)
•	•

NOT FOR ACTION – FIRST READING ONLY

SILVERSTEIN & CREEDON
ATTORNEY AT LAW
LEGION COMMONS
71 LEGION PARKWAY, THIRD FLOOR
BROCKTON, MASSACHUSETTS 02301

DAVID SILVERSTEIN
1928-1985

RALPH SILVERSTEIN
SCOTT B. RUBIN
JACK O. SILVERSTEIN

TELEPHONE (508) 587-0142
FAX: (508) 588-2667
1-800-752-3202

JOHN F. CREEDON
JOHN T. MURPHY
1943-2020

TELEPHONE (508) 584-4088
FAX: (508) 584-7760

May 24, 2022

Emily Williams, Director
C/o Town of Bridgewater
Council on Aging
10 Wally Krueger Way
Bridgewater, MA 02324

Re: Trustees of the Home for Aged Men in the City of Brockton

Dear Ms. Williams;

The Trustees of the Home for Aged Men in the City of Brockton have recently voted to grant your organization the sum of ten thousand dollars ($10,000.00). Therefore, I have enclosed a check made payable to Town of Bridgewater Council on Aging in the afore-mentioned amount.

We must reiterate to you that the Howard Home is under the Attorney General's Office-Public Charities Division and thus, is audited for compliance with the Trust each year. Every bit of expenditures made with our donation must be made on behalf of ***elderly only*** and we are ***NOT*** allowed to pay any salaries or provide for capital expenditures (i.e. new buildings or new wings on buildings). **Also, we require that a detailed description of the expenditures made from this grant be mailed to us for our records.**

When you have depleted this grant and ***after submitting a detailed expenditure report,*** you may make a written request for additional funds. The Trustees will review each request and you will be notified of our decision.

If you have any questions, or need any further explanation as to the guidelines of the trust, please do not hesitate to contact me at my office.

Very truly yours,

JOHN F. CREEDON

Bridgewater Town Council

In Town Council, Tuesday, June 7, 2022

Council Order: O-FY22-073

Introduced By:	Town Manager
Date Introduced	June 7, 2022
First Reading:	June 7, 2022
Second Reading/Hearing:	
Amendments Adopted:	
Third Reading:	
Date Adopted:	
Date Effective:	

Order O-FY22-073

TRANSFER ORDER CPA BWPL CONSERVATION & PRESERVATION HISTORICAL RECORDS – LIBRARY PROJECT

ORDERED; that the Town Council assembled vote to:

In accordance with section 6-4 of the Bridgewater Home Rule Charter, vote to appropriate $89,310 from CPA Reserves for Historic Preservation (Account#2100-324200) for this Project.

Explanation:
See CPC recommendations of total funding of $89,310 from the Historic Reserve Account #324200 (current balance of $318,463) for the conservation and digitization of approved expenses from this project.

Committee Referrals and Dispositions:

Referral(s)	Disposition(s)
•	•

NOT FOR ACTION – FIRST READING ONLY

BRIDGEWATER PUBLIC **LIBRARY**

Community Preservation Committee
Project Application
Historic Archives Preservation Project

Prepared by: Bridgewater Public Library

March 2022

Project Application
Community Preservation Committee
Bridgewater, MA

Table of Contents

1. Project Cover Sheet with Signature and Project Application
2. Project Narrative and Timeline
    - 2.1 Project Description, Tasks, and Anticipated Outcome
    - 2.2 CPC Goals and Priorities
    - 2.3 Community Needs
    - 2.4 Community Support
    - 2.5 Implementation and Timeline
    - 2.6 Organizational Experience and Capacity
    - 2.7 Maintenance
    - 2.8 Multi-Year Projects
3. Budget Narrative
    - 3.1 Project Cost
    - 3.2 Leveraging Funding
    - 3.3 Anticipated Project Expenses
    - 3.4 Project Cost Assumptions
    - 3.5 Acquisition of an Interest in Real Estate
    - 2.6 Bonding Against CPA Funds
    - 2.7 Project Budget Attachments
4. Attachments
    - 4.1 Documentation of site control on the property
    - 4.2 Photographs of project site and renderings of project site
    - 4.3 Map of project site
    - 4.4 Letter of support from Senior Center
    - 4.5 Letter of Support from Historical Commission (letter also confirms historical significance of items in the BWPL Archives & Special Collections)
    - 4.6 Letter of Support from Library Board of Trustees
    - 4.7 Letter of Support from Old Bridgewater Historical Society
    - 4.8 Letter of Support from Bridgewater State University's Maxwell Library Archives and Special Collections
    - 4.9 Letter of Commitment from SHRAB Veterans' Heritage Grant

Project Application
Community Preservation Committee
Bridgewater, MA

4.10 Letter of Commitment from Flora T. Little Trust
4.11 Statement explaining how the proposed project complies with the U.S. Secretary of the Interior's Standards
4.12 Detailed Project Expenses
4.13 Quote from Gaylord (gallery space)
4.14 Quote from Gaylord (processing supplies)
4.15 Quote from NEDCC (veterans' records)
4.16 Quote from NEDCC (town records books)
4.17 Quote from NEDCC (town records book with mold)
4.18 Quote from Conserv
4.19 Quote from Donnegan Systems Inc.
4.20 Quote from B&H Foto & Electronics Corp. (audio recording equipment)
4.21 Quote from B&H Foto & Electronics Corp. (computer for interactive elements)
4.22 Quote from VananServices.com
4.23 Quote from Demco
4.24 Estimate from Electrician
4.25 Estimate from Audio Visual Intelligence
4.26 Estimate from Moving Company

Project Application
Community Preservation Committee
Bridgewater, MA

Section 1: Cover Sheet/General Information

An electronic copy of this application and all supporting materials should be submitted to the CPC Chair at *cpc@bridgewaterma.org* and the CPC's administrative assistant (McGraw, Joshua <JMCGRAW@bridgewaterma.org>). Applications should be submitted **no later than 4:00PM at least two weeks prior to the CPC's meeting (the CPC meets on the fourth Wednesday of each month)**.

Complete applications received by this date will be reviewed at the next CPC meeting and considered for recommendation to the Town Council. Applications received after this will be reviewed at the following month's meeting, unless you receive an exception from the CPC chair for cases related to real estate purchase opportunities.[1] Projects may have timelines extending to a maximum of five years.

Projects will be favored by the CPC where:

- The project addresses at least one goal of the current CPC 5-yr. plan *https://www.bridgewaterma.org/DocumentCenter/View/2928/Community-Preservation-Committee-Plan?bidId=*
- the applicant has site control of the proposed project parcel or involvement of the site owner.
- there is demonstrated community support for the project from elected officials, abutters, user groups, civic associations, and community organizations.
- applicants can demonstrate their capacity to implement their project and have a plan for ongoing maintenance and stewardship. projects occur on public space or private space with public access.

- Applicant Signature:_____

  Date Submitted:_____

[1] For cases related to real estate purchase opportunities, the CPC may consider emergency requests for funding outside of their regular meeting schedule. If you think you might be eligible for emergency consideration, please contact the CPC Chair. The CPC Chair has the authority to accept exceptions or extensions. They will consider such requests on a case-by-case basis and is under no obligation to grant any requested extensions or exceptions.

Project Application
Community Preservation Committee
Bridgewater, MA

GENERAL INFORMATION

Project Name: Historic Archives Preservation
Project Location:
Bridgewater Public Library
15 South Street
Bridgewater, MA 02324
(downtown historic district)

Legal Property Owner of Record: Town of Bridgewater

CPA Program Area *(check all that apply):*

- □ Open Space
- ■ **Historic Preservation**
- □ Community Housing
- □ Recreation

PROJECT DESCRIPTION

Short Project Description:
The Bridgewater Public Library possesses documents, photographs, and physical items designated historically significant by the Town of Bridgewater Historical Commission. Unfortunately these items are in dire need of preservation and conservation and access is limited due to disorganization and physical location.

Using CPA funding to launch the preservation component of our Historic Archives Preservation initiative, the Bridgewater Public Library will process collections in the Archives and Special Collections, digitize select items from those collections, record a series of oral history interviews, create a museum-quality preservation and exhibition space, and curate an interactive exhibit for all BWPL visitors.

Estimated Start Date: 08/01/22 (start of CPA funded components)
Estimated Completion Date: 02/28/23
Amount Requested: $100,000 **Total Project Cost: $174,000**

Project Application
Community Preservation Committee
Bridgewater, MA

PROJECT CONTACT

Contact Person: Jed T. Phillips, Director, Bridgewater Public Library
Telephone: 508-697-3331 ext. 4 **Email:** jphillips@bridgewaterma.org

Project Sponsor/Organization *(check one below)*:

- ■ **Town Committee or Department**
- □ Public Charity/Non-Profit
- □ Private Group/Individual

Have you or this organization applied for or received CPA funding before?

- □ Yes
- ■ **No**

If yes, what project and when? The Bridgewater Public Library has not received funds before and to our knowledge no modern conservation work has been done on the Bridgewater records books in its care. A project to restore Town of Bridgewater vital records was requested by the Town Clerk in 2008 (Project #5924).

ASSURANCE

I _____hereby certify under the penalties of
(Print the name of the fiduciary agent)

perjury the following application information is true and correct to the best of my knowledge and I am legally able to enter into a contract on behalf of

_____
(Print the name of the contracting agency)

with the Town of Bridgewater for Community Preservation Funds.

Signature_____
Date_____

Title_____

Return to Table of Contents

Project Application
Community Preservation Committee
Bridgewater, MA

Section 2: Project Narrative and Timeline

1. PROJECT DESCRIPTION, TASKS, & ANTICIPATED OUTCOME

The Bridgewater Public Library (BWPL) seeks support for a combined preservation and conservation initiative that increases accessibility, protects vulnerable collections both physically and digitally, and gives citizens of the Town of Bridgewater a lens through which to connect with their Town's history.

Using a variety of grant funding to purchase supplies, equipment, conservation work, and services for this projects, the BWPL will, at minimum, process five collections, record 300 minutes of oral history interview footage (approximately 9-10 interviews), and use these records and this footage to curate an interactive exhibit for the Bridgewater public. In order to leverage SHRAB Veterans' Heritage Grant funding, our first exhibit will center on Bridgewater veterans from the American Civil War forward.

In conjunction with a SHRAB Veterans' Heritage Grant application, the BWPL conducted an initial inventory of veterans' records in our Archives and Special Collections finding approximately 1,600 items directly related to Bridgewater's history of military service and possessing cultural importance.

Because these materials are not processed to current archival standards, however, library patrons cannot readily access them. Access is further discouraged by the location of the Archives and Special Collections, currently stored in the Historical Room on the second floor of the BWPL. When brought to the Historical Room, patrons frequently comment that they "didn't know this was here," but at present the BWPL lacks an area outside of the Historical Room to present and preserve historical resources.

Using CPA grant funding we will purchase secure, preservation-quality display cases and exhibit accessories that allow us to both preserve and present Bridgewater's history for and to its citizens. Using SHRAB grant funding and Flora T. Little Trust funding to purchase supplies and Historical Room storage, the BWPL will process collections, digitize items, publish digital files, and rehouse collections in a suitable environment.

Project Application
Community Preservation Committee
Bridgewater, MA

We will use a combination of CPA and SHRAB grant funding to have conservation work performed on our most vulnerable veterans' records (based on NEDCC consultation) and prepare them for display. We will also use CPA grant funding for conservation work on two early town records books. These books are the cornerstone of our collection but have not received adequate attention because of insufficient staffing at the BWPL, and a recent consultation with a representative from the Massachusetts Board of Library Commissioners revealed inactive mold on one of the books. We have selected this book for conservation work as well as the oldest town records book in our collection dated 1656.

Archival processing will begin at the same time as the SHRAB funded portion of the conservation work, and the CPA funded portion will follow a few months later. We will process a number of veteran's collections using current archival standards and best practices and produce a finding aid (the guide to an archival collection) for each. Using the "More Product, Less Process" archival processing method for the largest collections, we will process, at minimum, the following:

- Andrew T. Pratt papers
- Bridgewater Public Library World War II collection
- Helen M. Cassiani papers
- John P. Townsend papers
- William H. Cornwell American Civil War badges
- Simpson family papers
- Bridgewater Independent newspapers

The BWPL's World War II collection, easily the largest of these collections, includes scrapbooks, photographs, news clippings, and cards identifying Bridgewater citizens who served in WWII. Items in this collection have such significance to Bridegwater, but are currently stored in unsafe cardboard boxes and plastic bags. Another WWII era collection, the Helen M. Cassiani papers include original military papers, telegrams sent by Cassiani during her internment as a POW, and numerous other records. According to the National WWII Museum, Lt. Cassiani was one of only 77 military nurses known as the "Angels of Bataan," making this collection one of great cultural importance.

The BWPL also houses collections of American Civil War veterans Andrew T. Pratt, John P. Townsend, and Lewis L. Simpson. Simpson served in the celebrated 54th Massachusetts Volunteer Infantry Regiment, and his wife, Marie Simpson, was a member of the Women's Relief Corps. These collections, although smaller, document an astonishing range of experiences in the American Civil War.

While processing, we will rehouse collections in archival quality enclosures on steel shelves stored in the Historical Room. Improved shelving (purchased with SHRAB grant funding) will expand our special collections storage by 60%, allowing us to relocate Veterans' records that are currently stored on the floor.

During archival processing, we select items for inclusion in the upcoming exhibit and for in-house digitization, following FADGI guidelines for documents, photographs materials, and artwork and ICOM International Committee for Documentation's recommendations for three dimensional objects. Both preservation and access copies will be stored on the archives server and on multiple external hard drives for optimal digital longevity, and the Archivist will perform regular checks to confirm data integrity. We will publish digitized items on Digital Commonwealth and the SAILS library network's Omeka, and finding aids will be published on the BWPL website. We will also pursue other sources of funding to digitize Town of Bridgewater records books through NEDCC during the conservation process.

When the preservation and processing nears completion, the oral history component of the project will launch. We aim to record 300 minutes of footage (approximately 9-10 interviews depending on interview length but at least 30 minutes each), and will continue to develop the BWPL oral history collection while maintaining the same high standard of digital preservation used for digitized items.

The BWPL will collaborate with municipal organizations such as the Senior Center and Veterans' Services to identify candidates, prioritizing interviews according to the Library of Congress Veterans' History Project Collections Policy Statement. We will refer to this statement as well as the American Folklife Center and Oral History Association resources to

structure the interviews and resulting files. We will share interviews with the Library of Congress Veterans' History Project and the Bridgewater Public, and interviews will be transcribed to further enhance accessibility.

This project will culminate in an exhibit featuring nearly 200 years of Bridgewater veterans. Patrons will learn veterans' histories through photographs and artifacts from the BWPL's own collection supplemented by loans from neighboring repositories, experience oral histories on an interactive digital monitor programmed by BWPL's Archivist, and leave with a fuller understanding of local history. We will also curate an Omeka digital exhibit that mirrors the in-person exhibit, allowing patrons to learn and experience Bridgewater history from their homes as well as in person.

Following the Bridgewater Veterans' exhibit, we plan to display the BWPL's series of Records of the Purchaser's of Bridgewater and give patrons the opportunity to see some of Bridgewater's oldest written records. Before this can occur, the early Bridgewater record books require conservation work. Most pressing is the fourth record book which has inactive mold on the back interior cover. Inactive mold will not do additional damage to the book, but if left untreated, it has a high potential to reactivate and spread to other records in the collection, causing significant damage and creating a health hazard.

Exhibits of this age and historical significance merit cases optimized for preservation. Our exhibit cases will have UV filtering vitrines, built-in security features, and silica gel compartments to maintain relative humidity. Cases are made from entirely archival materials and the frames themselves are constructed with zero formaldehyde MDF.

Because the seal on exhibit cases creates a microclimate, we will purchase individual environmental monitoring sensors to record the temperature and humidity of each case. These data loggers piggyback on a Massachusetts Board of Library Commissioners (MBLC) program that provides public libraries with free environmental monitoring software and two sensors through July 2024. In 2024 we will reevaluate costs and vendors to find the most economical solution (without compromising preservation standards) moving forward.

This exhibit marks the beginning of an ongoing series of Bridgewater history exhibits at the BWPL. At present, no other permanent, publicly accessible gallery spaces dedicated to special collections exist, but by providing that space, we can collaborate with nearby institutions, enriching our exhibits while giving other archives the opportunity to share collections in a secure, publicly-accessible environment.

2. CPC GOALS AND PRIORITIES

The second historic preservation goal on page 31 of the Community Preservation Plan is to "Preserve the Town's historic artifacts and documents through digitization and the creation of permanent facilities to house these resources." This project directly addresses both facets of this goal. During archival processing, we will digitize a number of items in-house (using equipment owned by the BWPL) and make them available on the SAILS library network Omeka site. We will use this platform to curate digital exhibits that mirror (with the exception of items not in the BWPL collection) in-person exhibits and expand accessibility to these historical resources to anyone with an internet connection. As noted in the project description, we will pursue other sources of funding to have the Town of Bridgewater records books digitized when they are unbound during the conservation process.

We will use CPA funding for "permanent facilities to house these resources" by creating a permanent gallery space to house resources on display. Each case will be outfitted with humidity control cartridges, UV filtering vitrine, and an environmental monitoring sensor, which the BWPL Archivist will monitor regularly.

Page 30 of the Community Preservation Plan states that "In general, CPA funds can be used for projects that deal with tangible historic resources, but not with historic interpretation, education or heightening awareness of history." For this project we will use CPA funds for preservation and conservation related activities, but these activities will naturally result in improved access and heightened awareness.

This project also aligns with several recommendations highlighted in the December 2021 draft of the Master Plan developed by the Bridgewater Community & Economic Development department webpage. Page four of the plan lists the Bridgewater Public Library among the Town's cultural amenities, and history is an integral part of culture.

Section 6.4 of the plan (pages 181-182), Natural, Cultural, and Open Space Resource Policies & Recommendations, further suggests that the Town:

- "Establish a local heritage tourism plan that covers the breadth of what Bridgewater has to offer with its open space, historic resources, and other cultural assets."
- "Partner with Bridgewater Public Library to preserve and retain historic documents."
- "In collaboration with Bridgewater Public Library and BSU, develop a strategy to promote and raise awareness of the Town's cultural, historic, and recreational opportunities and programs."

Creating an environment where Bridgewater's historical artifacts are preserved and accessible aligns perfectly with these recommendations. It encourages preservation and retention. It encourages historical tourism to the Bridgewater Public Library, which is situated in Bridgewater's downtown, and it will ultimately generate awareness of Bridgewater history and Bridgewater's historic resources.

3. COMMUNITY NEEDS

The Town of Bridgewater constructed the Memorial Building "for the purpose of commemorating our citizens in times of national peril and providing a suitable hall for the library and for such objects of history or scientific interest as may come into possession of the Town."[2] The library has since moved next door to 15 South Street, and the Town has lost a permanent exhibition space dedicated to Bridgewater history.

Similar institutions like Old Bridgewater Historical Society and Bridgewater State University's Archives and Special Collections do not have permanent, public exhibit spaces specifically dedicated to historical artifacts. Using CPA funding, we will create a space that both preserves and displays historical artifacts, filling a decades-long gap in the cultural landscape of Bridgewater.

[2] TM Vol.8 (1881), 181, quoted in Carlton D. Hunt, "Bridgewater, MA Memorial Library Formation History," (2020).

Project Application
Community Preservation Committee
Bridgewater, MA

4. COMMUNITY SUPPORT

Name *(committee, department, organization, etc.)*	**Date Requested**	**Date Submitted**
Bridgewater Senior Center	October 2021	October 22, 2021
Bridgewater Historical Commission	November 2021	January 31, 2022
Bridgewater Public Library Board of Trustees	December 2021	December 12, 2021
Old Bridgewater Historical Society	October 2021	October 23, 2021
Bridgewater State University's Maxwell Library Archives & Special Collections	October 2021	October 26, 2021

This project has the written support of the Historical Commission and Senior Center, and we have the expressed support from the Town of Bridgewater Department of Veterans' Services. The Historical Commission has designated all artifacts in the library's local history collection as having historical significance, the Senior Center will assist us in locating volunteers for this project, and the Department of Veterans' Services will assist us in identifying interview candidates for our oral history initiative.

In addition, the two major repositories for historically significant Bridgewater collections (the Old Bridgewater Historical Society and the Bridgewater State University Maxwell Library Archives & Special Collections) have written of their support for this project and have expressed interest in loaning items for display in BWPL exhibits. By soliciting donations from local archival repositories, we will improve the quality of exhibits, boost relationships and cooperation with other organizations, and increase visibility for all archival and special collections documenting Bridgewater history.

Please see letters of support in the attachments section.

Project Application
Community Preservation Committee
Bridgewater, MA

5. IMPLEMENTATION AND TIMELINE

The initial implementation of this project will take an estimated 12 months, but the foundation this project creates will enable us to simultaneously preserve and provide access to Bridgewater's historical treasures permanently. This timeline takes into consideration that SHRAB Veterans' Heritage Grant funding disbursement begins in February and that the soonest CPA funding would be available would likely be June 2022.

Month:	March	April	May	June	July	August	Sept	Oct	Nov	Dec	Jan	Feb
Processing and Conservation												
Order shelving	■											
Shelving installation				■								
Order processing supplies	■											
Process collections	■	■	■	■					■			
SHRAB-funded conservation	■	■	■	■								
CPA-funded conservation						■	■	■	■			
Digitize select items		■	■	■	■							
Sent files to network Omeka					■							
Publish finding aids on website					■							
Oral Histories												
Order audio equipment	■											
Conduct oral histories, transcription						■	■	■				

Project Application
Community Preservation Committee
Bridgewater, MA

Month:	March	April	May	June	July	August	Sept	Oct	Nov	Dec	Jan	Feb
Exhibit												
Order exhibit cases and accessories												
Electrical work												
AV installation												
Exhibit case installation												
Evaluate our collections for exhibit												
Contact other repositories for loans												
Formalize exhibit checklist												
Purchase Intuiface license												
Edit exhibit video content												
Program interactive elements												
Write/print labels and text panels												
Loaned items arrive												
Exhibit installation												
Omeka and physical exhibits open												

6. ORGANIZATIONAL EXPERIENCE AND CAPACITY

This project will be managed by the BWPL's Archivist and Digital Assets Librarian (trained archivist and award-nominated video editor experienced in creating oral history interviews and archival exhibits with interactive video elements) working under the supervision of the BWPL Director (trained librarian, Bill & Melinda Gates Foundation *Best Small Town Library in America* Finalist, and experienced photographer).

The mission statement of the BWPL is "To educate, inform, enrich and inspire." This project will use Bridgewater History to do each of these, but in order to achieve this, we must build an environment suitable for the long term preservation and display of historic items.

7. MAINTENANCE

This project requires the presence of an on-staff archivist at the Bridgewater Public Library to curate ongoing exhibits, contracted bi-weekly cleaning of the exhibit cases, a recurring license to the Adobe suite and Intuiface, and a new environmental monitoring contract in three years. With the exception of environmental monitoring, all required expenses will draw from the regular library budget.

The Archivist will visually inspect gallery elements when we take an exhibit down and will regularly monitor environmental conditions within the exhibit cases. Should the temperature and humidity of the cases become unsuitable for historic artifact preservation, items will be remanded to the climate controlled Historical Room at the Bridgewater Public Library until conditions stabilize.

For the next three years, environmental monitoring is provided through an MBLC partnership with Conserv. We will add six additional sensors, one for each exhibit case, through CPC grant funding to monitor the microclimate of each individual case. At the end of three years, we will reevaluate Conserv as a vendor and explore alternatives for environmental monitoring. Once we determine a solution, we will either include this in the Library budget or look to grant funding options, likely direct grants from the Massachusetts Board of Library Commissioners.

8. MULTI-YEAR PROJECTS

We do not anticipate a multi-year project.

Return to Table of Contents

Project Application
Community Preservation Committee
Bridgewater, MA

Section 3: Budget Narrative

1. PROJECT COST

PROJECT BUDGET OVERVIEW			
Total Project Cost	**CPA Amount Requested**	**Other Funding Sources**	**CPA Funds: % of Total**
$174,000	$100,000	$74,000	57%

2. LEVERAGING FUNDING

SOURCES OF FUNDING OVERVIEW		
Source (private, federal, state, or local government)	**Amount**	**Status**
Bridgewater Public Library Budget	$39,000.00	Committed
Flora T. Little Trust	$20,000.00	Committed
SHRAB Veterans' Heritage Grant	$15,000.00	Committed
CPC Grant	$100,000.00	Applying
In-kind volunteer hours	$699.40	n/a

Based on a rate of $34.97 per hour, we anticipate $699.40 of in-kind volunteer hours. We estimate that Flota T. Little funds will be available by February 2022, and SHRAB funds will be disbursed beginning in February 2022.

Please see letters of commitment from the Flora T. Little Trust and the SHRAB Veterans' Heritage grant in the attachments section of our application.

Project Application
Community Preservation Committee
Bridgewater, MA

3. ANTICIPATED PROJECT EXPENSES

SUMMARY OF EXPENSES					
Description	**BWPL Budget Amount**	**FTL Trust Amount**	**SHRAB Grant Amount**	**CPC Grant Amount**	**Total (BWPL+FTL+ SHRAB+CPC)**
Personnel	$32,585	$0	$0	$0	**$32,585**
Equipment	$688	$18,510	$7,226	$76,912	**$103,336**
Supplies	$600	$0	$1,012	$691	**$2,302**
Conservation	$0	$0	$6,640	$15,320	**$21,960**
Building /Construction	$3,527	$0	$0	$5,494	**$9,021**
Other	$1,597	$1,490	$122	$1,580	**$4,789**
Total	**$38,997**	**$20,000**	**$15,000**	**$99,997**	**$173,994**

Please see detailed expenses chart in the attachments section.

4. PROJECT COST ASSUMPTIONS

We have based the majority of project costs on quotes, estimates from vendors, and pricing information listed on vendor websites. We assumed the archivist's salary based on the FY22 budget, but this will likely increase beginning in the next fiscal year. Please see vendor quotes and estimates in the attachments section.

5. ACQUISITION OF AN INTEREST IN REAL ESTATE

We do not anticipate any real estate acquisitions.

6. BONDING AGAINST CPA FUNDS

We do not anticipate bonding against CPA funds.

7. PROJECT BUDGET ATTACHMENTS

Please see section 4.12 for Detailed Project Expenses.

Return to Table of Contents

Project Application
Community Preservation Committee
Bridgewater, MA

Section 4: Attachments

4.1 Documentation of site control on the property

Parcel ID 34-88

Portion of Property Record Card:

Key: 6316 — **Town of BRIDGEWATER - Fiscal Year**

LEGAL

CURRENT OWNER	PARCEL ID	LOCATION
BRIDGEWATER TOWN OF TOWN LIBRARY 15 SOUTH ST BRIDGEWATER, MA 02324	34-88	15 SOUTH ST

TRANSFER HISTORY	DOS	T	SALE PRICE	BK-PG (Cert)
BRIDGEWATER TOWN OF	06/02/1970	QS	35,000	3594-644

LAND

CD	T	AC/SF/UN	BASE	FACT	PHY	ADJ BASE	SAF	OBS	Lpi	VC	CREDIT AMT	ADJ VALUE
103	S	50,050	C8 1.00	100 1.00	100 1.00	259,875	1.00	100 1.00	C8 1.25			298,590

TOTAL	1.149 Acres	ZONING		FRNT	0
BASE	C8	NOTE			
FACT	FACTOR 100				
PHY	PHY 100				

ASSESSED	CURRENT	PREVIOUS
LAND	298,600	289,800
BUILDING	2,873,100	2,814,900
DETACHED	25,600	25,500
OTHER	0	0
TOTAL	3,197,300	3,130,200

DETACHED

TY	QUAL	COND	DIM/NOTE	YB	UNITS	ADJ PRICE	RCNLD
PAV	A 1.00	60 0.40	ASPH PAVING		20,000	2.70	21,600
LH1	A 1.00	50 0.50	YD LTS - SGL		6	1,324.00	4,000

PHOTO 10/26/2017

BLDG COMMENTS

BRIDGEWATER PUBLIC LIBRARY

BU

BUILDING	CD	ADJ	DESC
MODEL	5		CIM-5
STYLE	93	1.25	LIBRARY [100%]
QUALITY	G	1.10	GOOD [100%]
FRAME	2	1.00	MASONRY [100%]

MEASURE	3/28/2011	DF
LIST	3/28/2011	DF
REVIEW	10/30/2017	DF

Link to Parcel Map

Link to Property Record Card

Return to Table of Contents

Project Application
Community Preservation Committee
Bridgewater, MA

4.2 Photographs of project site and renderings of project site

Photographs of project site as of January 2021

Project Application
Community Preservation Committee
Bridgewater, MA

Renderings of proposed site upgrades

Project Application
Community Preservation Committee
Bridgewater, MA

Project Application
Community Preservation Committee
Bridgewater, MA

Project Application
Community Preservation Committee
Bridgewater, MA

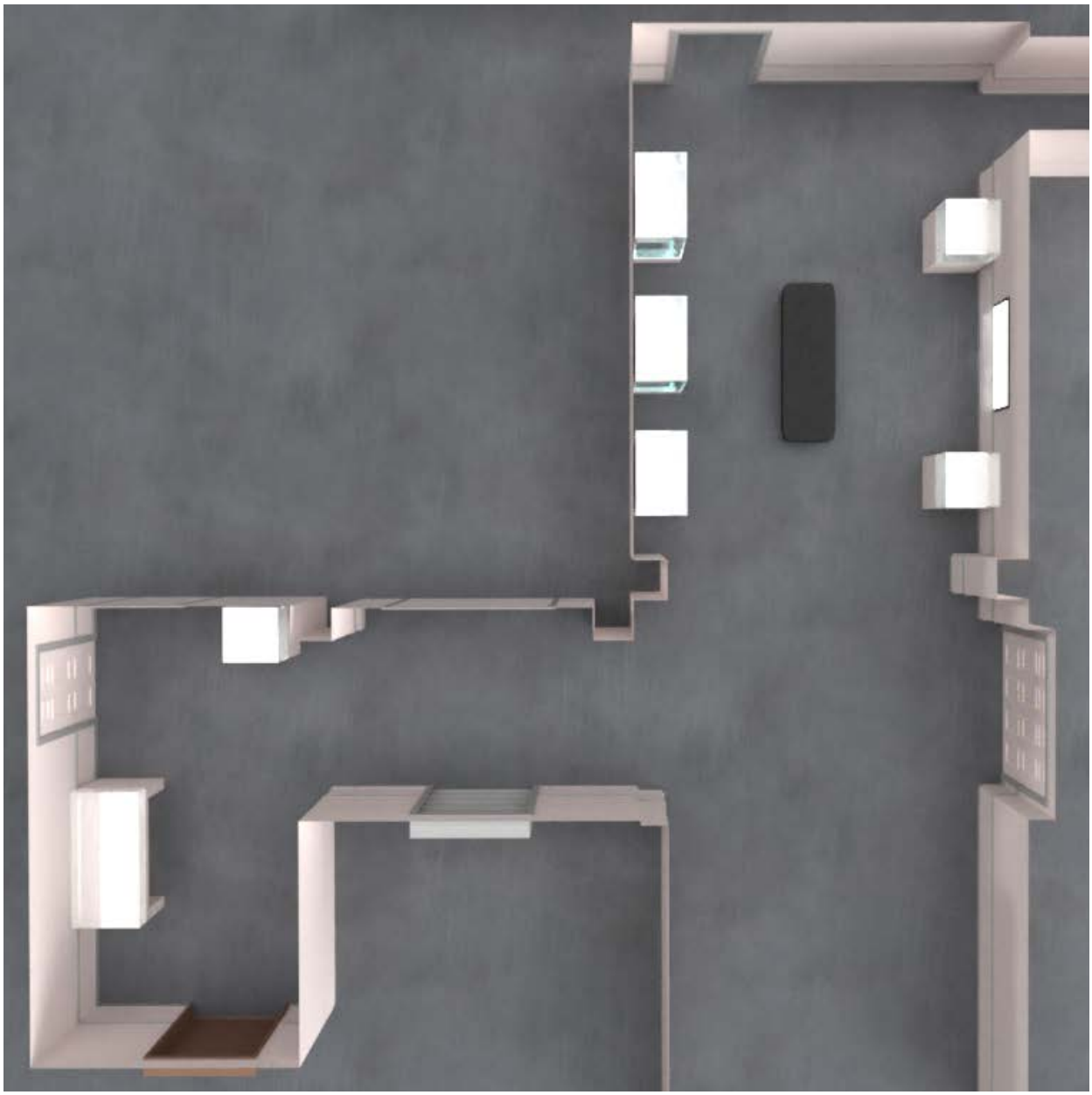

Project Application
Community Preservation Committee
Bridgewater, MA

Photographs of Town of Bridgewater records books prioritized for conservation

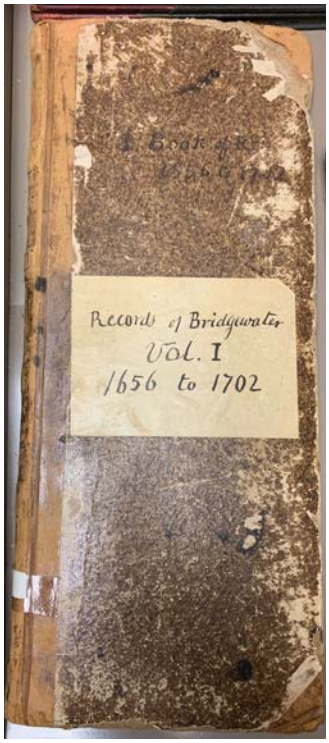

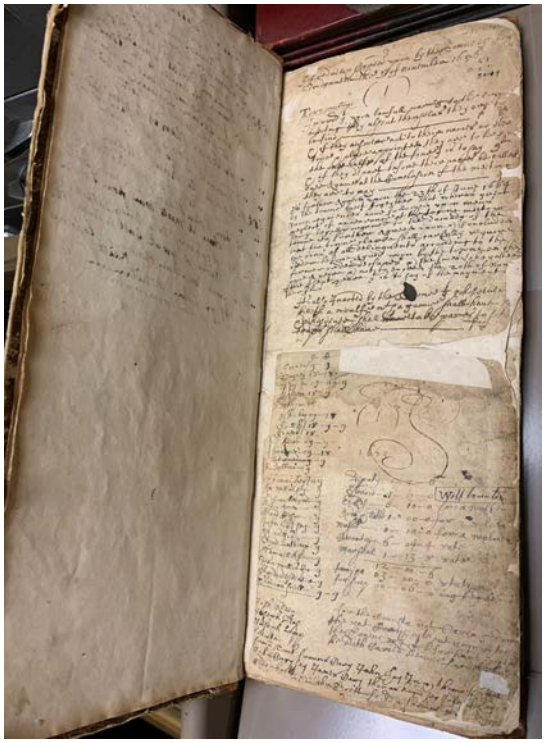

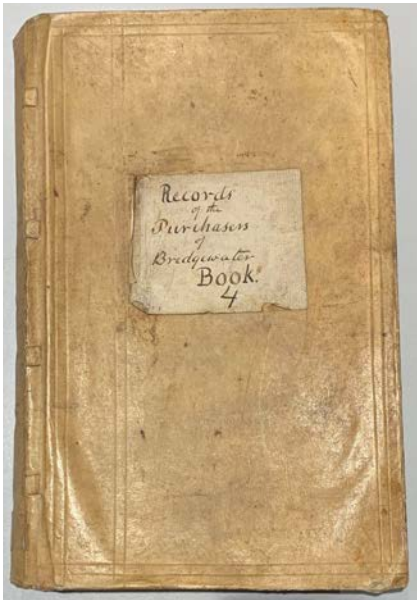

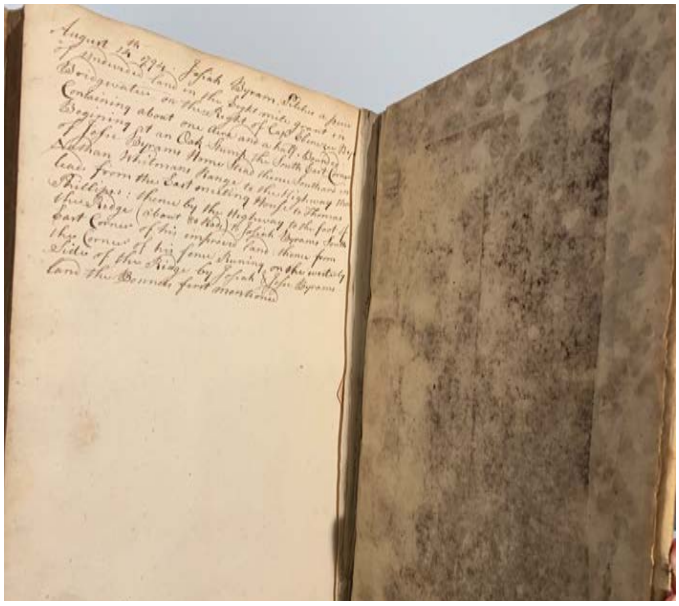

[Return to Table of Contents](#)

Project Application
Community Preservation Committee
Bridgewater, MA

4.3 Map of project site

Parcel ID 34-88

Portion of Bridgewater, MA Parcel Map 34:

[Link to Parcel Map]
[Link to Property Record Card]

Return to Table of Contents

4.4 Letter of support from Senior Center

Town of Bridgewater Massachusetts

Emily Williams
Director

Bridgewater Council on Aging
Cole-Yeaton Senior Center
10 Wally Krueger Way
Bridgewater, MA 02324
508-697-0929
www.bridgewaterma.org

October 22, 2021

Jed Phillips
Director of the Bridgewater Public Library
15 South Street
Bridgewater, MA 02324

Dear Jed,

On behalf of the Bridgewater Council on Aging and Cole-Yeaton Senior Center, I fully support the comprehensive Bridgewater Public Library Preservation and Exhibition Project and our involvement. The Town of Bridgewater and its citizens hold valuable pieces of historic information. By capturing, collecting, preserving, and sharing the knowledge, experiences, and artifacts of the people, future generations will truly benefit. We look forward to working with you in this honorable effort.

Sincerely,

Emily Williams

Emily Williams

Director

Bridgewater:
Preserving Our Past. Enriching Our Present. Building Our Future.

[Return to Table of Contents]

4.5 Letter of Support from Historical Commission

Letter also confirms that the contents of the Archives and Special Collections are historically significant.

Bridgewater Historical Commission
64 Central Square
Bridgewater, Mass. 02324
508-697-0904

Community Preservation Commission
Academy Building
64 Central Square
Bridgewater, MA 02324

January 31, 2022

Re: CPC application

To Whom It May Concern:

On the request of Jed Phillips Director of the Bridgewater Public Library, the Bridgewater Historical Commission has reviewed their CPC funding application.

For some time, the library has had a Historical Room in which has been deposited many very important items relating to our town's rich history. There is also some very interesting material relating to the sacrifices made by Bridgewater residents who have participated in our nation's military. It is our understanding that the funding being requested can provide the means to properly catalog and make these items more accessible to the public.

It will also be great to see many of these materials available in a digital format further increasing the accessibility over the internet to Bridgewater residents and school children. These materials will also be made available to various state and federal archives for further research.

We look forward to the implementation of this program and the future dissemination of this material. The Historical Commission has determined that the library's entire local history collection is of historical significance to our town and has voted wholeheartedly to support this application.

Sincerely,

David R. Moore, Vice Chair
Bridgewater Historical Commission

[Return to Table of Contents]

4.6 Letter of Support from Library Board of Trustees

Bridgewater Public Library

15 South Street, Bridgewater, Ma 02324 — 508-697-3331 Fax: 508-279-1467— www.bridgewaterpubliclibrary.org

Dec. 12, 2021

To Whom It May Concern:

The Bridgewater Public Library Board of Trustees puts it's full support behind Library Director, Jed Phillips and his vision for the preservation, conservation, digitization, and display of historically important artifacts and documents, particularly those items related to the history and stories of our Massachusetts veterans.

As Director, Jed has full authority to determine the library's needs, develop a plan of action, and oversee any and all elements of a project, including but not limited to grant application, sourcing additional funding, ordering and purchasing of supplies, materials, and resources, and entering into contract with appropriate professionals for any needed expert service.

Constance Franciosi

Constance Franciosi
President
Bridgewater Public Library Board of Trustees

Return to Table of Contents

4.7 Letter of Support from Old Bridgewater Historical Society

OLD BRIDGEWATER HISTORICAL SOCIETY

Memorial Building
162 Howard Street
West Bridgewater, MA 02379
Telephone: (508) 559-1510
admin@oldbridgewater.org

October 23, 2021

To Whom It May Concern:

Old Bridgewater Historical Society helps keep alive and promotes the spirit and memory of Old Bridgewater by actively collecting, preserving, and publishing material relating to the history and the families of the original settlement. We serve and partner with Bridgewater, East Bridgewater, West Bridgewater and Brockton, the towns which made up the original Bridgewater purchase.

Recently, we partnered with Bridgewater University on the procurement of a historic map of Plymouth County. The East and West Bridgewater Public libraries were integral parts of our children's programs at the Keith House. OBHS supported the city of Brockton on many occasions throughout this years Bicentennial celebration. We are always open to new and exciting opportunities to keep our local history alive, well cared for and accessible to the community.

We are very excited at the prospect of working with the Bridgewater Public Library to highlight and preserve military records and artifacts. Loaning some of our pieces to the library to exhibit would allow many more people to view and appreciate them. We are staunch supporters of the restoration of historic documents. In the past few years, OBHS has worked with NEDCC in the restoration of our copy of the original Bridgewater Deed, as well as the Mary Hayward letter; a letter from a mother to her son dated 1652. We humbly support the Bridgewater Public Library in their efforts to preserve their military records for future generations.

Sincerely,
Janice O'Brien
Vice President, pro tem
Old Bridgewater Historical Society

WEST BRIDGEWATER • EAST BRIDGEWATER • BRIDGEWATER • BROCKTON

[Return to Table of Contents]

4.8 Letter of Support from BSU Maxwell Library Archives & Special Collections

BRIDGEWATER
STATE UNIVERSITY

October 26, 2021

Letter of Support for the Bridgewater Public Library

Bridgewater, MA is one of the oldest settled areas in the country with its original land deed dating back to 1649. The Old Bridgewater Historical Society, located in West Bridgewater, focuses on the history of colonial Bridgewater and the families that settled the region. What Bridgewater lacks today is a museum and historical society that focuses on the current town of Bridgewater from the 1800s to the present day. The Bridgewater Public Library is currently working towards attempting to fill this void.

A major component of the library's initiatives is acquiring professional artifact and archival display cases for educational exhibitions. Museum quality material is by no means cheap. With the extravagant price of display cases and other equipment comes several crucial benefits: UV coated plexiglass to protect items from irreversible sun and light damage; locking mechanisms for each case to ensure security; and pleasing visual aesthetics to allow exhibit goers a worthwhile educational experience. Just as importantly, proper museum quality display equipment will open the doors for the library to collaborate with other organizations to have items be safely loaned for future exhibits without fear of damage being done to the loaned items.

This request by the Bridgewater Public Library for funds is a significant opportunity for the town to invest in not only the preservation of town history, but to make this history more accessible and to promote it in a much more efficient manner than currently possible. The library has my full support in their efforts to help turn their institution into a more vibrant cultural center on the town common. With the recent investment of hiring a professional archivist, the library, working with the town of Bridgewater, has a unique opportunity in front of them to continue to build on this town-library collaboration to create a more dynamic cultural setting the town can use to attract future tourists and visitors to its downtown district.

Sincerely,

Orson Kingsley, PhD
Head of Archives & Special Collections
Maxwell Library
Bridgewater State University

Clement C. Maxwell Library • Maxwell Library • Bridgewater, MA 02325
508-531-1392 • www.bridgew.edu

[Return to Table of Contents]

4.9 Letter of Commitment from SHRAB Veterans' Heritage Grant

The Commonwealth of Massachusetts
William Francis Galvin, Secretary of the Commonwealth
Archives Division

Mr. Jed Phillips, Library Director
Bridgewater Public Library
15 South Street
Bridgewater, MA 02324

Dear Mr. Phillips: January 14, 2022

I want to offer you and the Bridgewater Public Library my congratulations on behalf of Secretary of State William F. Galvin, the Massachusetts State Historical Records Advisory Board and the Massachusetts General Court. The Board recently voted $15,000 to fund your application to the Veterans' Heritage Grant Program.

The Board requests a Project Status Report by the end of the calendar year. We will be in touch by electronic mail to walk you through the procurement process to access those funds.

Thank you for your interest in the Veterans' Heritage Grant Program and for your efforts in preserving the history of our Commonwealth's veterans.

Respectfully,

John D. Warner, Jr.
Archivist of the Commonwealth of Massachusetts

220 Morrissey Boulevard, Boston, Massachusetts 02125 · (617) 727-2816
www.sec.state.ma.us/arc

[Return to Table of Contents]

4.10 Letter of Commitment from Flora T. Little Trust

Flora T Little Trust
15 South Street
Bridgewater, MA 02324

December 27, 2021

To Whom It May Concern,

This is to confirm that at the last meeting of the Flora T Little Trust, on October 20, 2021, the Flora T Little trustees voted unanimously to be one of the supporters of the Veterans Heritage Project at the Bridgewater Public Library. They will give $20,000. from the FTLT for this project.

Sincerely,

Janet B. Dye
Chair, Flora T. Little Trust

[Return to Table of Contents]

4.11 Statement explaining how the proposed project complies with the U.S. Secretary of the Interior's Standards

The U.S. Secretary of the Interior's Standards primarily apply to historic properties not historic records and special collections, however, many of these standards run parallel to archival conservation tenants that will be upheld during the conservation process.

> *Each property will be recognized as a physical record of its time, place and use. Work needed to stabilize, consolidate and conserve existing historic materials and features will be physically and visually compatible, identifiable upon close inspection and properly documented for future research.*

Before conservation treatment, NEDCC will provide written and photographic documentation of the item before and after treatment. The BWPL will store records of conservation work with our archival administrative files and will retain these records for the life of the object.

> *The existing condition of historic features will be evaluated to determine the appropriate level of intervention needed. Where the severity of deterioration requires repair or limited replacement of a distinctive feature, the new material will match the old in composition, design, color and texture.*

When Japanese paper, cotton rag board, or linen tape are applied during conservation, the color will be compatible with that of the existing document.

> *Chemical or physical treatments, if appropriate, will be undertaken using the gentlest means possible. Treatments that cause damage to historic materials will not be used.*

Before undergoing treatments, NEDCC will test the solubility of inks and adhesives
Most treatments utilize humidification not harsh chemicals, and all repairs and post-conservation storage will be with chemically inert, archival materials. We expect the harshest chemical treatment to be alkalized water, which will not cause additional damage.

Return to Table of Contents

Project Application
Community Preservation Committee
Bridgewater, MA

4.12 Detailed Project Expenses

PERSONNEL								
Item Description	**Part #**	**Cost Per Unit**	**Quantity**	**BWPL Budget Amount**	**FTL Trust Amount**	**SHRAB Grant Amount**	**CPA Grant Amount**	**Total BWPL+FTL+ SHRAB+CPA**
Archivist & Digital Assets Librarian - Project coordinator, will devote approximately 21 hours a week @ $29.84 per hour for 52 weeks. Based on FY22 budget.	-	$29.84	1,092	$32,585.28	$0.00	$0.00	$0.00	$32,585.28
20 in-kind volunteer hours - For SHRAB grant matching purposes, volunteer time was assumed to be equivalent to $34.97 per hour	-	-	-	$0.00	$0.00	$0.00	$0.00	$0.00
PERSONNEL TOTAL				**$32,585.28**	**$0.00**	**$0.00**	**$0.00**	**$32,585.28**

EQUIPMENT								
Item Description	**Part #**	**Cost Per Unit**	**Quantity**	**BWPL Budget Amount**	**FTL Trust Amount**	**SHRAB Grant Amount**	**CPA Grant Amount**	**Total BWPL+FTL+ SHRAB+CPA**
Gallery Equipment and Accessories								
Gaylord Archival® Metro™ Uptown Museum Case with removable shelving added and UV filtering	NCTU2236UV	$10,901.25	3	$0.00	$0.00	$0.00	$32,703.75	$32,703.75
Gaylord Archival® Metro™ Tribeca Museum Case with casters added and UV filtering	NCTP2424UV	$4,026.63	3	$0.00	$0.00	$0.00	$12,079.89	$12,079.89
Gaylord Archival® Metro™ Ellis Hinged Table Museum Case with casters added and UV filtering	MEHY6030UV	$14,711.48	1	$0.00	$0.00	$0.00	$14,711.48	$14,711.48

Project Application
Community Preservation Committee
Bridgewater, MA

Gaylord Archival® Stand-Alone Raised Deck for Metro™ Museum Cases	NCTRD2424	$639.94	3	$0.00	$0.00	$0.00	$1,919.82	$1,919.82
Gaylord Archival® Metro™ Linen-Wrapped Angled Riser	NCTLAR1818	$376.33	6	$0.00	$0.00	$0.00	$2,257.98	$2,257.98
Gaylord Archival® Linen-Wrapped Retaining Bar	NCTLRB10	$39.61	6	$0.00	$0.00	$0.00	$237.66	$237.66
Gaylord Archival® Metro™ Linen Wrapped Display Riser	NCLWR3444	$94.64	3	$0.00	$0.00	$0.00	$283.92	$283.92
Gaylord Archival® Metro™ Linen Wrapped Display Riser	NCLWR244	$146.15	3	$0.00	$0.00	$0.00	$438.45	$438.45
Gaylord Archival® Metro™ Linen Wrapped Display Riser	NCLWR444	$152.91	3	$0.00	$0.00	$0.00	$458.73	$458.73
Gaylord Archival® Metro™ Linen Wrapped Display Riser	NCLWR3466	$95.44	3	$0.00	$0.00	$0.00	$286.32	$286.32
Gaylord Archival® Metro™ Linen Wrapped Display Riser	NCLWR288	$146.33	3	$0.00	$0.00	$0.00	$438.99	$438.99
Acrylic Solid Block Display Riser	61-505	$26.60	6	$0.00	$0.00	$0.00	$159.60	$159.60
Acrylic Solid Block Display Riser	61-513	$47.64	6	$0.00	$0.00	$0.00	$285.84	$285.84
Acrylic Solid Block Display Riser	61-525	$104.51	6	$0.00	$0.00	$0.00	$627.06	$627.06
Acrylic Solid Block Display Riser	61-507	$35.42	6	$0.00	$0.00	$0.00	$212.52	$212.52
Acrylic Solid Block Display Riser	61-517	$124.56	6	$0.00	$0.00	$0.00	$747.36	$747.36
Acrylic Sword/Gun Stand	61-494	$18.05	2	$0.00	$0.00	$0.00	$36.10	$36.10
Acrylic Sword/Gun Stand	61-491	$16.72	2	$0.00	$0.00	$0.00	$33.44	$33.44
Acrylic Stand for 14–18" Platters	61-456	$31.01	2	$0.00	$0.00	$0.00	$62.02	$62.02
Acrylic Stand for 18–22" Platters	61-457	$40.50	2	$0.00	$0.00	$0.00	$81.00	$81.00
Acrylic Stand for 22–30" Platters	61-458	$48.41	2	$0.00	$0.00	$0.00	$96.82	$96.82
Acrylic Miniature Triangular Display Easels (12-Pack)	61-128	$10.70	1	$0.00	$0.00	$0.00	$10.70	$10.70
Acrylic Miniature Triangular Display Easels (12-Pack)	61-129	$12.29	1	$0.00	$0.00	$0.00	$12.29	$12.29
Benchmark Plexiglass & Brass Upright Butterfly Book Mount	221C	$342.15	6	$0.00	$0.00	$0.00	$2,052.90	$2,052.90

Project Application
Community Preservation Committee
Bridgewater, MA

Gaylord Archival® Acrylic Lipped Book Cover Displayer	CE247	$27.32	6	$0.00	$0.00	$0.00	$163.92	$163.92
Gaylord Archival® Acrylic Lipped Book Cover Displayer	CE468	$31.41	6	$0.00	$0.00	$0.00	$188.46	$188.46
Conservation Dress Form Small	DMF4300S-G	$1,192.25	1	$0.00	$0.00	$0.00	$1,192.25	$1,192.25
Conservation Suit Form Medium	DMF4400M-G	$1,201.75	1	$0.00	$0.00	$0.00	$1,201.75	$1,201.75
Acrylic Label Front Pinch Clips (12-Pack)	61-138	$62.45	5	$0.00	$0.00	$0.00	$312.25	$312.25
Steel Folding Signage Easel	ST925	$83.03	3	$0.00	$0.00	$0.00	$249.09	$249.09
Acrylic Helmet/Hat Stand	61-484	$69.29	1	$0.00	$0.00	$0.00	$69.29	$69.29
Double Suction Cups	9039	$35.99	4	$0.00	$0.00	$0.00	$143.96	$143.96
Benchmark Pinning Pliers	21310	$87.40	1	$0.00	$0.00	$0.00	$87.40	$87.40
Lesro Luxe Bench	W13811080	$913.23	1	$0.00	$0.00	$0.00	$913.23	$913.23
Dell OptiPlex 3080 Micro Desktop Computer	BH #DE3080DXVT4	$687.60	1	$687.60	$0.00	$0.00	$0.00	$687.60
Conserv environmental monitoring sensors	-	-	-	$0.00	$0.00	$0.00	$2,156.00	$2,156.00
Gallery Equipment and Accessories Total				**$687.60**	**$0.00**	**$0.00**	**$76,912.24**	**$77,599.84**
Historical Room Shelving								
Steel spacesaver shelving units with decorative end panels from Donnegan Systems Inc., FTL to pay for approximately 76% and SHRAB to pay for approximately 24%	-	$24,149.40	1	$0.00	$18,510.05	$5,639.35	$0.00	$24,149.40
Historical Room Shelving Total				**$0.00**	**$18,510.05**	**$5,639.35**	**$0.00**	**$24,149.40**
Oral Histories								
Zoom H6 Portable Recorder Field Kit	BH #ZOH6K (B&H Kit)	$501.94	1	$0.00	$0.00	$501.94	$0.00	$501.94

Project Application
Community Preservation Committee
Bridgewater, MA

Rode Wireless GO II 2-Person Compact Digital Wireless Omni Lavalier Microphone System/Recorder Kit (2.4 GHz, Black)	BH #ROWGIIK (B&H Kit)	$457.00	1	$0.00	$0.00	$457.00	$0.00	$457.00
Hosa Technology Pro Stereo Breakout Cable - 3.5mm Stereo Mini to Dual 3-Pin XLR Male (3')	BH #HOHMX003Y	$13.76	1	$0.00	$0.00	$13.76	$0.00	$13.76
Rode VideoMic GO Camera-Mount Shotgun Microphone	BH #ROVMG	$66.75	1	$0.00	$0.00	$66.75	$0.00	$66.75
SanDisk 512GB Extreme PRO UHS-I SDXC Memory Card	BH #SAEPSD512GB	$109.44	1	$0.00	$0.00	$109.44	$0.00	$109.44
Seagate 10TB Expansion Desktop USB 3.0 External Hard Drive	BH #SESTEB100004	$218.89	2	$0.00	$0.00	$437.78	$0.00	$437.78
Oral Histories Equipment Total				**$0.00**	**$0.00**	**$1,586.67**	**$0.00**	**$1,586.67**
EQUIPMENT TOTAL				**$687.60**	**$18,510.05**	**$7,226.02**	**$76,912.24**	**$103,335.91**

SUPPLIES								
Item Description	**Part #**	**Cost Per Unit**	**Quantity**	**BWPL Budget Amount**	**FTL Trust Amount**	**SHRAB Grant Amount**	**CPA Grant Amount**	**Total BWPL+FTL+ SHRAB+CPA**
Gallery Supplies								
Innovera® Antistatic Screen Cleaning Wipes in Pop-Up Tub, 120/Pack	IVR51510	$6.79	2	$13.58	$0.00	$0.00	$0.00	$13.58
Acrifix® Antistatic Acrylic Cleaner	P2003	$18.24	1	$18.24	$0.00	$0.00	$0.00	$18.24
Acrifix® Antistatic Acrylic Cleaner Refill	P2004	$45.88	2	$91.76	$0.00	$0.00	$0.00	$91.76
Microfiber Multipurpose Cleaning Cloth	88-MCC	$6.08	6	$36.48	$0.00	$0.00	$0.00	$36.48

Project Application
Community Preservation Committee
Bridgewater, MA

Gaylord Pre-Conditioned Humidity Control Cartridge 50%RH	61-GBCART-50	$31.67	20	$0.00	$0.00	$0.00	$633.40	$633.40
Museum Gel	MGEL	$20.81	1	$0.00	$0.00	$0.00	$20.81	$20.81
Benchmark Stainless Steel Pins (100-Pack)	22114	$36.57	1	$0.00	$0.00	$0.00	$36.57	$36.57
Gallery Supplies Total				**$160.06**	**$0.00**	**$0.00**	**$690.78**	**$850.84**
Oral Histories								
Energizer Max AA Alkaline Batteries (1.5V, 12-Pack)	BH #ENMAAAB12	$7.49	1	$0.00	$0.00	$7.49	$0.00	$7.49
SanDisk 128GB Ultra Flair USB 3.0 Flash Drive	BH #SAUFU3FD128G	$15.21	20	$0.00	$0.00	$304.20	$0.00	$304.20
Oral Histories Supplies Total				**$0.00**	**$0.00**	**$311.69**	**$0.00**	**$311.69**
Processing and Preservation								
All-Stabilo Pencil - black for writing on archival plastic sleeves	57110B	$4.16	1	$0.00	$0.00	$4.16	$0.00	$4.16
All-Stabilo Pencil - white for writing on archival plastic sleeves	57111A	$4.16	1	$0.00	$0.00	$4.16	$0.00	$4.16
Gaylord Archival® Spacers for Card File Boxes (5-Pack) - for military card box	57167	$9.39	1	$0.00	$0.00	$9.39	$0.00	$9.39
Gaylord Archival® Folder Stock Artifact Boxes (10-Pack)	AB251	$30.56	1	$0.00	$0.00	$30.56	$0.00	$30.56
Gaylord Archival® Folder Stock Artifact Boxes (10-Pack)	AB461	$45.26	1	$0.00	$0.00	$45.26	$0.00	$45.26
Gaylord Archival® E-Flute Shallow Lid Multipurpose Box with DuraShield™	BESEFSB1210	$25.58	1	$0.00	$0.00	$25.58	$0.00	$25.58
Gaylord Archival® Barrier Board Shallow Lid Multipurpose Box with DuraShield™	BESFB20163	$23.12	1	$0.00	$0.00	$23.12	$0.00	$23.12
Gaylord Archival® Deep Lid Drop-Front Print Box with DuraShield™	BESPB20161	$22.86	1	$0.00	$0.00	$22.86	$0.00	$22.86

Project Application
Community Preservation Committee
Bridgewater, MA

Gaylord Archival® Deep Lid Drop-Front Print Box with DuraShield™	BESPB24201	$24.61	1	$0.00	$0.00	$24.61	$0.00	$24.61
Buffered Acid-Free Tissue (100-Pack)	BT1117	$24.10	2	$0.00	$0.00	$48.20	$0.00	$48.20
Gaylord Archival® Blue/Grey Barrier Board Card File Box - for military cards	CF1264	$11.30	3	$0.00	$0.00	$33.90	$0.00	$33.90
Gaylord Archival® Blue/Grey Barrier Board Separate Lid Letter-Size Document Case	D12102SL	$10.62	1	$0.00	$0.00	$10.62	$0.00	$10.62
Gaylord Archival® Blue/Grey Barrier Board Separate Lid Letter-Size Document Case	D12105SL	$11.47	6	$0.00	$0.00	$68.82	$0.00	$68.82
Gaylord Archival® E-flute Spacers (5-Pack)	EFCB821	$10.24	1	$0.00	$0.00	$10.24	$0.00	$10.24
Gaylord Archival® Blue E-flute Clamshell Microfilm Reel Boxes (100-Pack)	EFMB331	$115.94	1	$0.00	$0.00	$115.94	$0.00	$115.94
Blue/Grey Barrier Board Shallow Lid Box	FB17113	$15.77	1	$0.00	$0.00	$15.77	$0.00	$15.77
Gaylord Archival® Blue/Grey Barrier Board Drop-Front Lobby Card Box	MV1114	$18.15	3	$0.00	$0.00	$54.45	$0.00	$54.45
Gaylord Archival® Buffered Interleaving Paper (25-Pack)	P1620B	$21.97	1	$0.00	$0.00	$21.97	$0.00	$21.97
Letter folders, 25 per pack	RF9111A	$13.43	3	$0.00	$0.00	$40.29	$0.00	$40.29
Gaylord Archival® B-flute Telescoping Roll Storage Box	TEL55CR	$21.97	2	$0.00	$0.00	$43.94	$0.00	$43.94
Gaylord Archival® Unbuffered Acid-Free Tissue (100-Pack)	UT1117	$23.03	2	$0.00	$0.00	$46.06	$0.00	$46.06
Processing and Preservation Supplies Total				**$0.00**	**$0.00**	**$699.90**	**$0.00**	**$699.90**
Print Collateral and Signage								
Brochures/print collateral	-			$220.00	$0.00	$0.00	$0.00	$220.00
Wall signs and labels	-			$220.00	$0.00	$0.00	$0.00	$220.00

Project Application
Community Preservation Committee
Bridgewater, MA

Print Collateral and Signage Supplies Total	**$440.00**	**$0.00**	**$0.00**	**$0.00**	**$440.00**
SUPPLIES TOTAL	**$600.06**	**$0.00**	**$1,011.59**	**$690.78**	**$2,302.43**

CONSERVATION								
Item Description	**Part #**	**Cost Per Unit**	**Quantity**	**BWPL Budget Amount**	**FTL Trust Amount**	**SHRAB Grant Amount**	**CPA Grant Amount**	**Total BWPL+FTL+ SHRAB+CPA**
Townsend Certificate								
Conservation	-	$2,160.00	1	$0.00	$0.00	$2,160.00	$0.00	$2,160.00
Matting and/or framing	-	$175.00	1	$0.00	$0.00	$175.00	$0.00	$175.00
Townsend Certificate Total				**$0.00**	**$0.00**	**$2,335.00**	**$0.00**	**$2,335.00**
Lewis Simpson Discharge Papers								
Conservation	-	$1,895.00	1	$0.00	$0.00	$1,895.00	$0.00	$1,895.00
Matting and/or framing	-	$375.00	1	$0.00	$0.00	$375.00	$0.00	$375.00
Lewis Simpson Discharge Papers Total				**$0.00**	**$0.00**	**$2,270.00**	**$0.00**	**$2,270.00**
Lewis Simpson Certificate								
Conservation	-	$1,860.00	1	$0.00	$0.00	$1,860.00	$0.00	$1,860.00
Matting and/or framing	-	$175.00	1	$0.00	$0.00	$175.00	$0.00	$175.00
Lewis Simpson Certificate Total				**$0.00**	**$0.00**	**$2,035.00**	**$0.00**	**$2,035.00**
Simpson Women's Relief Corp Certificate								
Conservation	-	$655.00	1	$0.00	$0.00	$0.00	$655.00	$655.00
Matting and/or framing	-	$490.00	1	$0.00	$0.00	$0.00	$490.00	$490.00

Project Application
Community Preservation Committee
Bridgewater, MA

Lewis Simpson Certificate Total				**$0.00**	**$0.00**	**$0.00**	**$1,145.00**	**$1,145.00**
Lewis Simpson Bubble Glass Portrait								
Conservation	-	$1,240.00	1	$0.00	$0.00	$0.00	$1,240.00	$1,240.00
Matting and/or framing	-	$480.00	1	$0.00	$0.00	$0.00	$480.00	$480.00
Lewis Simpson Certificate Total				**$0.00**	**$0.00**	**$0.00**	**$1,720.00**	**$1,720.00**
Town Proprietor's Books								
Conservation for Bridgewater records book #1	-	$8,530.00	1	$0.00	$0.00	$0.00	$8,530.00	$8,530.00
Conservation for Bridgewater purchaser's book #4 (mold)		$3,925.00	1	$0.00	$0.00	$0.00	$3,925.00	$3,925.00
Town Proprietor's Books Total				**$0.00**	**$0.00**	**$0.00**	**$12,455.00**	**$12,455.00**
CONSERVATION TOTAL				**$0.00**	**$0.00**	**$6,640.00**	**$15,320.00**	**$21,960.00**

BUILDING AND CONSTRUCTION								
Item Description	**Part #**	**Cost Per Unit**	**Quantity**	**BWPL Budget Amount**	**FTL Trust Amount**	**SHRAB Grant Amount**	**CPA Grant Amount**	**Total BWPL+FTL+ SHRAB+CPA**
Electrician - Lighting installation	-	$1,029.00	1	$1,029.00	$0.00	$0.00	$0.00	$1,029.00
Exhibit case uncrating and installation	-	$1,485.00	1	$0.00	$0.00	$0.00	$1,485.00	$1,485.00
Audio Visual Intelligence - Technical installation, BWPL to pay for approx. 27.2% and CPA to pay for approx. 72.8%	-	$5,506.85	1	$1,497.86	$0.00	$0.00	$4,008.99	$5,506.85
Building and construction contingency	-	$1,000.00	1	$1,000.00	$0.00	$0.00	$0.00	$1,000.00
BUILDING AND CONSTRUCTION TOTAL				**$3,526.86**	**$0.00**	**$0.00**	**$5,493.99**	**$9,020.85**

Project Application
Community Preservation Committee
Bridgewater, MA

OTHER								
Item Description	**Part #**	**Cost Per Unit**	**Quantity**	**BWPL Budget Amount**	**FTL Trust Amount**	**SHRAB Grant Amount**	**CPA Grant Amount**	**Total BWPL+FTL+ SHRAB+CPA**
Captioning and Transcription								
Captioning services and ISO standard transcription services to make oral histories more accessible, based on rates provided by VananServices.com	-	-	-	$0.00	$1,489.95	$0.00	$0.00	$1,489.95
Captioning and Transcription Total				**$0.00**	**$1,489.95**	**$0.00**	**$0.00**	**$1,489.95**
Shipping and Transportation								
Shipping costs for processing supplies from Gaylord Archival	-	$83.63	1	$0.00	$0.00	$83.63	$0.00	$83.63
Shipping costs for exhibit supplies and equipment from Gaylord Archival	-	$1,580.00	1	$0.00	$0.00	$0.00	$1,580.00	$1,580.00
Mileage reimbursement for pickup from NEDCC after conservation treatment - based on IRS 2022 mileage rate - Items already delivered and can stay at NEDCC for 6 months	-	$0.59	65.6	$0.00	$0.00	$38.38	$0.00	$38.38
Shipping and Transportation Total				**$0.00**	**$0.00**	**$122.01**	**$1,580.00**	**$1,702.01**
Program Licenses								
Intuiface Composer license for interactive video elements in exhibit, annually recurring expense	-	$960.00	1	$960.00	$0.00	$0.00	$0.00	$960.00
Adobe Suite license for programs like Photoshop, Media Encoder, Premiere Pro, Lightroom, and others needed to create and manage digital assets, annually recurring expense based on FY 22 subscription cost	-	$637.37	1	$637.37	$0.00	$0.00	$0.00	$637.37
Programs and Licenses Total				**$1,597.37**	**$0.00**	**$0.00**	**$0.00**	**$1,597.37**

Project Application
Community Preservation Committee
Bridgewater, MA

OTHER TOTAL	$1,597.37	$1,489.95	$122.01	$1,580.00	$4,789.33
TOTAL	$38,997.17	$20,000.00	$14,999.62	$99,997.01	$173,993.80

Return to Table of Contents

Project Application
Community Preservation Committee
Bridgewater, MA

4.13 Quote from Gaylord (gallery space)

Gaylord Archival

P.O. Box 4901
Syracuse, NY 13221-4901
USA

Phone: 800-448-6160
Fax: 800-595-7265
Email: bids@gaylord.com

Quote Number: 180145
Account Number: 1024943
Customer Bid #: E226

Effective Date: Oct 06, 2021
Expiration Date: Jun 05, 2022
Revised Date: Feb 11, 2022

Quoted To:
ALLYSON SEKERKE
BRIDGEWATER PUBLIC LIBRARY
15 SOUTH ST
Bridgewater MA, United States 02324
Email: ASEKERKE@SAILSINC.ORG
Phone: 508-697-3331

Quoted By:
Jon Moretti
Phone: 800-345-5330 opt 4
Email: jon.moretti@gaylord.com

Part Nbr	Long Description	UOM	Qty	Unit Price	Ext. Price
NCTP2424UV	Gaylord Metro Tribeca Museum Case UV Acrylic 56Hx24Wx24"D	EA	3	$4,026.63	$12,079.89
MEHT6030UV	Ellis Hinged Table Case w/UV 44 1/2H x 60W x 30"D	EA	1	$14,711.48	$14,711.48
NCTRD2424	Stand Alone Raised Deck 24 x 24" Inside 18 1/8 x 18 1/8"	EA	3	$639.94	$1,919.82
NCTLAR1818	Gaylord Linen Wrapped Angled Risers Fits 18W x 18"D Deck	EA	6	$376.33	$2,257.98
NCTLRB10	Gaylord Linen Wrapped Retaining Bar	EA	6	$39.61	$237.66
NCLWR3444	Gaylord Metro Linen Wrapped Display Riser 3/4H x 4W x 4"D	EA	3	$94.64	$283.92
NCLWR244	Gaylord Metro Linen Wrapped Display Riser 2H x 4W x 4"D	EA	3	$146.15	$438.45
NCLWR444	Gaylord Metro Linen Wrapped Display Riser 4H x 4W x 4"D	EA	3	$152.91	$458.73
NCLWR3466	Gaylord Metro Linen Wrapped Display Riser 3/4H x 6W x 6"D	EA	3	$95.44	$286.32
NCLWR288	Gaylord Metro Linen Wrapped Display Riser 2H x 8W x 8"D	EA	3	$146.33	$438.99
61-505	Acrylic Solid Block Display Riser 1H x 4W x 4"D	EA	6	$26.60	$159.60
61-513	Acrylic Solid Block Display Riser 2H x 4W x 4"D	EA	6	$47.64	$285.84
61-525	Acrylic Solid Block Display Riser 4H x 4W x 4"D	EA	6	$104.51	$627.06
61-507	Acrylic Solid Block Display Riser 1H x 6W x 6"D	EA	6	$35.42	$212.52
61-517	Acrylic Solid Block Display Riser 2H x 8W x 8"D	EA	6	$124.56	$747.36
61-494	Acrylic Sword Gun Stand 6H x 4W x 4"D	EA	2	$18.05	$36.10
61-456	Acrylic Stand for 14 to 18" Platters	EA	2	$31.01	$62.02
61-457	Acrylic Stand for 18 to 22" Platters	EA	2	$40.50	$81.00
61-458	Acrylic Stand for 22 to 30" Platters	EA	2	$48.41	$96.82
61-128	Acrylc Mini Trianglr Dsply Easel 1 1/2Hx1 1/4Wx1 1/2"D Pkg12	PKG	1	$10.70	$10.70
61-129	Acrylc Mini Trianglr Dsply Easel 2 1/8Hx1 3/4Wx2"D Pkg 12	PKG	1	$12.29	$12.29
CE247	Gaylord Acrylic Lipped Book Cover Displayer 2H x 4W x 7"D	EA	6	$27.32	$163.92

Project Application
Community Preservation Committee
Bridgewater, MA

CE468	Gaylord Acrylic Lipped Book Cover Displayer 4H x 6W x 8"D	EA	6	$31.41	$188.46
61-138	Acrylic Label Front Pinch Clips 1 1/4Hx2Wx1 7/8"D Pkg 12	PKG	5	$62.45	$312.25
ST925	Steel Signage Display Easel 6'H Black	EA	3	$83.03	$249.09
61-484	Acrylic Helmet Hat Stand 12H x 6W x 6"D	EA	1	$69.29	$69.29
9039	Double Suction Cups	EA	4	$35.99	$143.96
61-GBCART-50	Gaylord Pre-Conditioned Humidity Control Cartridge 50% RH	EA	20	$31.67	$633.40
DMF4300S-G	Small Conservation Dress Form Grey	EA	1	$1,192.25	$1,192.25
DMF4400M-G	Medium Conservation Suit Form Grey	EA	1	$1,201.75	$1,201.75
221C	Plxiglss Brss Upright Bttrfly Book Mnt 7x11" To 9 1/2x14"	EA	6	$325.04	$1,950.24
61-491	Acrylic Sword Gun Stand 3H x 3W x 2 1/2"D	EA	2	$16.72	$33.44
88-MCC	Microfiber Photo Cleaning Cloth	EA	6	$6.08	$36.48
P2003	16 oz ACRIFIX Anti-Static Acrylic Cleaner Spray Bottle	EA	1	$18.24	$18.24
P2004	1 Gallon ACRIFIX Anti-Static Acrylic Cleaner Refill Bottle	EA	2	$45.88	$91.76
MGEL	Museum Gel	EA	1	$20.81	$20.81
22114	Benchmark Stainless Steel Pins .036 dia. x 1"L Pkg 100	PKG	1	$36.57	$36.57
21310	Benchmark Pinning Pliers	EA	1	$87.40	$87.40
11439NC	Metro NCTU2236UV Uptown Case UV Acrylic w/ shelves	EA	3	$10,901.25	$32,703.75

Does not include Uncrating, movement beyond first door or setting in place

Sub Total	$74,577.61
Shipping w/ Liftgate	$1,580.00
Total	$ 76,157.61 USD
FOB Destination	Pre-Paid & Added

Freight rates are estimates at time of quoting and are subject to change
Shipment: 2 - 18 Weeks ARO

ADDITONAL INFO
Liftgate and Inside Delivery service are included in the shipping charge (see terms below for description and limitations of service)

Terms & Conditions
All orders resulting from this proposal are subject to Credit Approval
Except for manufacturing defects, all custom and non-stock items are non-cancelable and non-returnable.

Shipping

Items too heavy or too large to ship by a parcel carrier will be shipped LTL common carrier. Shipping charges quoted are based on a dock delivery. In those instances, if large trucks cannot back up to a raised dock at your delivery location, then you may require extra services. If you do not have a loading dock or forklift enhanced delivery services are strongly encouraged and or may be required to facilitate a safe off-loading of your merchandise. Special Delivery Instructions: Please include receiving hours, days you are closed, and any other instructions for the delivering carrier when placing your order.

Lift Gate Truck Delivery
The driver will be using a truck that has a lift, which will lower the shipment to ground level. From there you will provide the movement of shipment into the building.

Project Application
Community Preservation Committee
Bridgewater, MA

Inside Delivery:

The driver may assist you in the movement of merchandise from the truck through the first door of the building, where it will be out of inclement weather. Movement beyond the first door is customer's responsibility. If you do not have a ramp this service is not available. Some doorways are not large enough for certain deliveries; please verify the physical clearance of your thresholds before ordering.

Installation & Assembly

Installation or Product Assembly are not included in shipping charges. We will glady deliver to your installer or mover of choice.

Orders Over $5,000

If your order exceeds $5,000.00 we require a signed purchase order. If your organization doesn't use formal purchase orders, no problem! We will send you an Order Acknowledgement to review for accuracy. Simply return a copy endorsed by an authorized signer, and we'll finalize your order. In some circumstances, credit references may be required for successful placement of your order. Please have them available upon request.

Ready to Order?

To help expedite your order and to ensure it is placed correctly, below is a checklist for you to reference when placing your Gaylord order.

____ Complete Billing Address – Include Contact Name & Phone Number

____ Complete Shipping Address – Include Contact Name & Phone Number (if different from above)

____ Gaylord Product Numbers - Please include the product numbers you'd like to order and specify your color choices or sizes, when applicable. If you are unsure of how to find product numbers or are not sure if you are using the correct product number, please contact Customer Service at 800-448-6160 for assistance.

Return to Table of Contents

Project Application
Community Preservation Committee
Bridgewater, MA

4.14 Quote from Gaylord (processing supplies)

Gaylord Archival

P.O. Box 4901
Syracuse, NY 13221-4901
USA

Phone: 800-448-6160
Fax: 800-595-7265
Email: bids@gaylord.com

Quote Number: 180749
Account Number: 1024943

Effective Date: Jan 05, 2022
Expiration Date: Feb 04, 2022
Revised Date: Jan 05, 2022

Quoted To:
ALLYSON SEKERKE
BRIDGEWATER PUBLIC LIBRARY
15 SOUTH ST
Bridgewater MA, United States 02324
Phone: 508-697-3331
Email: asekerke@sailsinc.org

Quoted By:
Dana Knapp
Phone: 800-448-6160 x8107
Email: Dana.Knapp@gaylord.com

Part Nbr	Long Description	UOM	Qty	Unit Price	Ext. Price
57110B	All-Stabilo Pencil White	EA	1	$4.16	$4.16
57111A	All-Stabilo Pencil Black	EA	1	$4.16	$4.16
57167	Gaylord 4 x 6" Spacers For Card File Boxes Pkg 5	PKG	1	$9.39	$9.39
AB251	Folder Stock Arcvl Artifact Box 1 1/2Hx2 1/2Wx5"L Pkg 10	PKG	1	$30.56	$30.56
AB461	Folder Stock Arcvl Artifact Box 4 5/8Wx6 1/2Lx1 1/2H Pkg 10	PKG	1	$45.26	$45.26
BESEFSB1210	DuraShield E-Flute Shallow Lid Box Blue 10 1/4W x 12L x 5H	EA	1	$25.58	$25.58
BESFB20163	DuraShield Shallow Lid Box BlueGrey 16 1/2Wx20 1/2Lx3 1/2"H	EA	1	$23.12	$23.12
BESPB20161	DuraShield DeepLid DropFrontBox BluGry 16 1/2x20 1/2x1 1/2H	EA	1	$22.86	$22.86
BESPB24201	DuraShield DeepLid DropFrnt Box BluGry 20 1/2x24 1/2x1 1/2H	EA	1	$24.61	$24.61
BT1117	Gaylord Archival Buffered Acid Free Tissue 11 x 17" Pkg 100	PKG	2	$24.10	$48.20
CF1264	Gaylord BluGry Archival Card File Box 4 1/8Hx6 1/8Wx12D	EA	3	$11.30	$33.90
D12102SL	Barrier Board Deep Lid Letter Document Case Blue Grey 2"D	EA	1	$10.62	$10.62
D12105SL	Gaylord BarerBrd DeepLid LetterSize Archival Document Case	EA	6	$11.47	$68.82
EFCB821	Gaylord E Flute Spacers Pkg 5	PKG	1	$10.24	$10.24
EFMB331	Blue EFlute Clamshell Archival Microfilm Reel Box Pkg 100	PKG	1	$115.94	$115.94
FB17113	BluGry BarerBrd ShallowLid Arcvl Box 11 1/2Wx17 1/2Lx3 1/2H	EA	1	$15.77	$15.77
MV1114	BluGry BarrierBoard DropFront Archival 12x15" Lobby Card Box	EA	3	$18.15	$54.45
P1620B	Gaylord Buffered Interleaving Paper 16 x 20" Pkg 25	PKG	1	$21.97	$21.97
RF9111A	Reinforced 1" Tab Letter Size File Folders Cream Pkg 25	PKG	3	$13.43	$40.29
TEL55CR	BFlute Telescoping Archival Roll Storage Box 5x5x40-80"	EA	2	$21.97	$43.94

Project Application
Community Preservation Committee
Bridgewater, MA

UT1117	Gaylord Unbuffered Acid-Free Tissue 11 x 17" Pkg 100	PKG	2	$23.03	$46.06
				Sub Total	$699.90
				Shipping & Handling	$83.63
				Total	$783.53
				FOB Destination	Pre-Paid & Added
Freight rates are estimates at time of quoting and are subject to change					
Shipment: 1 - 4 Weeks ARO Depending on Stock at Time of Order					

Terms & Conditions

All orders resulting from this proposal are subject to Credit Approval

Except for manufacturing defects, all custom and non-stock items are non-cancelable and non-returnable.

Shipping

Items too heavy or too large to ship by a parcel carrier will be shipped LTL common carrier. Shipping charges quoted are based on a dock delivery. In those instances, if large trucks cannot back up to a raised dock at your delivery location, then you may require extra services. If you do not have a loading dock or forklift enhanced delivery services are strongly encouraged and or may be required to facilitate a safe off- loading of your merchandise. Special Delivery Instructions: Please include receiving hours, days you are closed, and any other instructions for the delivering carrier when placing your order.

Lift Gate Truck Delivery- Additional $75.00 Charge:

The driver will be using a truck that has a lift, which will lower the shipment to ground level. From there you will provide the movement of shipment into the building.

Inside Delivery -Additional $55.00 charge:

The driver may assist you in the movement of merchandise from the truck through the first door of the building, where it will be out of inclement weather. Movement beyond the first door is customer's responsibility. If you do not have a ramp this service is not available, please discuss other options with your Salesperson. Some doorways are not large enough for certain deliveries; please verify the physical clearance of your thresholds before ordering. Note: Additional inside delivery charges will be incurred for delivery requests that are made for areas beyond the inside of the first-floor door and are only offered if a freight elevator is available for use.

Installation & Assembly

Installation or Product Assembly are not included in shipping charges. You may opt to add different services such as Installation or Assembly to your order. Please contact the Gaylord Sales Department at 800-345-5330 to discuss your options and obtain costs for these services.

Orders Over $5,000

If your order exceeds $5,000.00 we require a signed purchase order. If your organization doesn't use formal purchase orders, no problem! We will send you an Order Acknowledgement to review for accuracy. Simply return a copy endorsed by an authorized signer, and we'll finalize your order. In some circumstances, credit references may be required for successful placement of your order. Please have them available upon request.

Return to Table of Contents

4.15 Quote from NEDCC

NEDCC

100 Brickstone Square, Andover, MA 01810-1494
ph 978-470-1010 • fax 978-475-6221 • www.nedcc.org

Bridgewater Public Library
Archives and Special Collections
15 South Street
Bridgewater, MA 02324

December 27, 2021
Project # 21-340_PF

Contact: Allyson Sekerke, Archivist/Digital Assets Librarian
asekerke@sailsinc.org
(817) 905-6265

Object 1
certificate
Artist/Author: Commonwealth of Massachusetts
Place/Date: 1870
Title/Subject: Certificate for Capt. John P. Townsend, 58th Division for His Service During the Civil War

Dimensions: 17" x 22"
Media: black printed ink, three different black manuscript inks
Support: wove paper
Signatures/Special Features: signed at the lower quarter of the printed area by William Claflin [Governer] and Jas [James] A. Cunningham [Adjudant General]

Current Condition
The certificate is loosely rolled, but difficult to access due to the brittleness of the paper overall. It was lightly restrained with weights for examination after determining that it did not need humidification and flattening for access. The certificate was lightly crushed at some point after it was rolled, resulting in creases and partial breaks every 3 1/2" to 4" that run the width of the document. There are also large, complex horizontal breaks just right of the vertical center of the document. Because the piece was rolled when this damage occurred, the breaks are repeated every 3 1/2" to 4 " with decreasing severity towards the lower edge of the document. The upper two breaks are the most severe at approximately 5" in length and with accompanying 1/2" x 2 1/2" long losses of the printed image and part of the text. The edges of the certificate have been severely tattered and torn, resulting in large losses along the entire length of the left and right edges and go into the margin by about 1". The paper is severely darkened overall and the verso shows patterns of discoloration from coming into prolonged contact with an acidic wooden board. There is a moderate amount of surface soiling overall. Preliminary media testing indicates that the inks are stable in filtered water.

Recommended Conservation Treatment Plan
- Provide written and photographic documentation of condition before and after treatment.
- Reduce surface soil using dry cleaning techniques as possible.
- Fully test solubility of inks in preparation for washing.
- After confirming that the media will permit aqueous treatment, humidify and wash in a filtered water bath to clean the paper and reduce staining, discoloration, and acidity. Alkalized water may be used to reduce staining.

Project # 21-340_PF
MKL/KB/MCF/AH

Page 1 of 8

- Tone Japanese paper for infills.
- Pre-mend tears as necessary and fill losses with toned Japanese paper and wheat starch paste.
- Line the object for overall support with Japanese paper and wheat starch paste and methyl cellulose.
- Humidify and flatten between blotters under moderate pressure.
- Place the certificate in a polyester (Melinex) L-sleeve to reinforce the object and protect against dirt and handling if matting is not chosen.
- House in an archival folder.

Optional Work

Matting

- After treatment the object will be attached to a 100% cotton rag primary backing board with Japanese paper hinges adhered with wheat starch paste.
- A window mat with standard outside dimensions, in a color sympathetic to the object and made of 100% cotton rag board will be cut and hinged to the primary backing board with linen tape.

Price – Object 1 (*See cost summary at end to approve.*)

- Recommended Treatment: $2,160
- Matting: $175

Object 2

document
Artist/Author: United States Army
Place/Date: Worchester, MA 1865
Title/Subject: Discharge Papers for Private Lewis L. Simpson

Dimensions: 10" x 8"
Media: black printed ink, brown manuscript inks, red manuscript ink
Support: thin wove paper
Signatures/Special Features: signed at lower right by a "Capt + AA D.C./A. C. M. Dept of the East" member, Signature is illegible, but possibly "?. W. H??shea?"; Red text and postal or tax stamp cross written from the bulk of the text, illegible due to level of fading
Housing: framed to size with antique glass in a decorative frame with leaves. Space behind the object is filled with layers of acidic papers, including parts of a folded newspaper from Brockton, MA 1936 (?) and a wooden board nailed into place

Current Condition

The discharge paper is extremely brittle from its time in contact with the acidic materials and is very delicate overall. The certificate was previously folded into uneven twelfths and is strongly creased along the various folds. It was broken along the two horizontal folds and then repaired using multiple layers of glassine tape. The tape has caused the paper to curl and break locally. There are other tears in the left half that are approximately 2" in length and start under each of the tape locations. The edges of the document are slightly tattered, burned, and curled from contact with the frame. A small burn line from the fillet is also present around the perimeter of the document. The piece is severely discolored overall from contact with the acidic framing materials and exposure to light. The light has also slightly faded the brown text, but more severely affected the red ink in the right half that is from either from tax or postal information. This ink fluoresces slightly in ultraviolet (UV) light. The document has paler mottled staining present at the center as well as scattered dark foxing overall. Some moderate dark staining from

an unknown source is present in the lower right corner. There are multiple handling creases and minor tattering present throughout. There is a minor to moderate amount of surface grime present on both sides of the document. Preliminary media testing indicates that the various inks are stable in filtered water and that the glassine tape has a water-soluble adhesive layer.

Recommended Conservation Treatment Plan

- Provide written and photographic documentation of condition before and after treatment.
- Reduce surface soil using dry cleaning techniques as necessary.
- Fully test solubility of inks and adhesives.
- After confirming that the media will permit aqueous treatment, humidify and wash in a filtered water bath to clean the paper and reduce staining, discoloration, and acidity. Alkalized water may be used to reduce staining if it will not affect the media.
- If deemed possible by testing, remove the glassine tapes during the washing process.
- Mend tears and breaks and reinforce creases with Japanese paper and wheat starch paste.
- Line the object for additional overall support with a thin Japanese paper and wheat starch paste and methyl cellulose if deemed necessary after initial repair.
- Humidify and flatten between blotters under moderate pressure.
- Place in a polyester (Melinex) L-sleeve to reinforce the object and protect against dirt and handling if matting is not chosen.
- House in an archival folder.

Optional Work

Matting/Framing

- The treated object will be attached to a 100% cotton rag primary backing board with Japanese paper hinges adhered with wheat starch paste.
- A spacer made of 100% cotton rag board will be cut and fitted into the original frame.
- The piece will be fitted with new UV filtering acrylic glazing.
- The piece will be fitted with a new secondary backing of archival board.
- The inside and outside of the original frame will be cleaned.
- The mounted and matted piece will be fitted into the existing client frame.
- The back of the frame will be finished with an archival dust cover and hanging hardware.

Price – Object 2 (*See cost summary at end to approve.*)

- Recommended Treatment: $1,895
- Matting/Framing: $375

Object 3

certificate
Artist/Author: Commonwealth of Massachusetts
Place/Date: 1869
Title/Subject: Certificate for Lewis L. Simpson, 54th Infantry for His Service During the Civil War

Dimensions: 14 3/4" x 10"
Media: black printed ink, three different black manuscript inks
Support: wove paper
Signatures/Special Features: signed at the lower quarter of the printed area by William Claflin [Governer] and Jas [James] A. Cunningham [Adjudant General]
Housing: framed close to size in a brown step frame with a gold fillet and regular glass; backed with acidic chipboard and a wooden board backing nailed into place.

Current Condition

The certificate was placed in a frame that was slightly too small for it and was folded over at the lower edge to fit. It is burned along the edges of the paper from being in contact with the wood of the frame. The tightness of the frame also caused minor tight undulations across the document. The certificate was affected by an uncontrolled ingress of water while it was framed. The water has caused multiple overlapping tidelines and localized tonal shift in the paper that makes it appear paler than the surrounding area. The ingress has also caused localized growth on the piece, primarily on the verso, of black, white, and brown mold spores. When tested, the mold appeared to be inactive. The lower left corner is darker than the rest of the object from the water ingress combined with acidic migration. The paper is moderately discolored overall. minor skinning and loss of the paper is present on the proper right side of the verso and margins from insect grazing. There are several pin holes near the upper edge on the left and right sides about 1 1/2" into the object. There is a minor amount of surface grime on the object. Preliminary media testing indicates that the inks are stable in filtered water. The frame and backing materials have been damaged by the mold and should be discarded rather than returning the object to its original housing.

Recommended Conservation Treatment Plan

- Provide written and photographic documentation of condition before and after treatment.
- Reduce surface mold with a HEPA vacuum.
- Treat areas of embedded mold locally with ethanol or isopropanol as needed.
- Reduce surface soil using dry cleaning techniques as necessary.
- Fully test solubility of inks.
- After confirming that the media will permit aqueous treatment, humidify and wash in a filtered water bath/to clean the paper and reduce staining, discoloration, and acidity. Alkalized water may be used to reduce staining.
- Reduce staining and even paper tone by controlled exposure to artificial light. Staining will be reduced, but may not be eliminated completely.
- Reinforce areas of skinning and fill losses with toned Japanese paper and wheat starch paste as necessary.
- Humidify and flatten between blotters under moderate pressure.
- Place in a polyester (Melinex) L-sleeve to reinforce the object and protect against dirt and handling if matting is not chosen.
- House in an archival folder.

Optional Work

Matting

- The treated object will be attached to a 100% cotton rag primary backing board with Japanese paper hinges adhered with wheat starch paste.
- A window mat with standard outside dimensions, in a color sympathetic to the object and made of 100% cotton rag board will be cut and hinged to the primary backing board with linen tape.

Price – Object 3 (*See cost summary at end to approve.*)

- Recommended Treatment: $1,860
- Matting: $175

Object 4

Project # 21-340_PF
MKL/KB/MCF/AH

Page 4 of 8

certificate
Artist/Author: Women's Relief Corps
Place/Date: 1911
Title/Subject: Certificate of Appointment for Maria Simpson as a Department Special Aide in the Women's Relief Corp

Dimensions: 10 1/2" x 13 1/2"
Media: black printed ink, brown manuscript ink
Support: wove paper
Signatures/Special Features: signed at lower edge of image by Nellie H. Libby [Department President] and Mary E. Elliot [Department Secretary]; large paper and paste seal at the lower left for the Corp, strongly embossed.
Housing: framed to size with antique glass in a brown hand etched frame; backed with stationary from the Rod and Gun Club of Bridgewater, acidic chipboard and a wooden board nailed into place.

Current Condition
The certificate was placed in a frame that was close to the object size and has been very lightly discolored in the margins from the wooden frame contact with the acidic framing materials. The size of the frame with no mat has also caused a number of tight cockles to form throughout the document as it moved against the glass. The paper is slightly brittle and lightly discolored overall. There is a minor amount of surface grime overall. While the media and seal are testing stable in filtered water, the depth of embossing and general stability of the piece do not make it a good candidate for aqueous treatment [ie washing] at this time. As such, a minimal treatment with a focus on rehousing is proposed below instead.

Recommended Conservation Treatment Plan
- Provide written and photographic documentation of condition before and after treatment.
- Reduce surface soil using dry cleaning techniques as necessary.
- Humidify and flatten between blotters with a void cut in the seal location to prevent crushing under moderate pressure.
- Place in a polyester (Melinex) L-sleeve to reinforce the object and protect against dirt and handling if framing is not chosen.
- House in an archival folder.

Optional Work
Matting/Framing
- The object will be attached to a 100% cotton rag primary backing board with Japanese paper hinges adhered with wheat starch paste.
- A spacer made of 100% cotton rag board will be cut and fitted into the original frame.
- The piece will be fitted with new UV filtering acrylic glazing.
- The piece will be fitted with a new secondary backing of archival board.
- The inside and outside of the original frame will be lightly cleaned.
- Large areas of loss or damage to the finish of the frame will be toned.
- The mounted and matted piece(s) will be fitted into the existing client frame.
- The back of the frame will be finished with an archival dust cover and hanging hardware.

Price – Object 4 (*See cost summary at end to approve.*)
- Recommended Treatment: $665
- Matting/Framing: $490

Project # 21-340_PF
MKL/KB/MCF/AH

Page 5 of 8

Object 5

Crayon enlargement
Artist/Author: unknown
Place/Date: unknown
Title/Subject: Portrait of Lewis Simpson

Dimensions: 19 1/2" x 13 1/2"
Media: silver, gelatin and applied media
Support: convex shaped board
Signatures/Special Features: pencil inscriptions on the reverse
Housing: wooden frame and convex glass

Current Condition

The crayon enlargement's support is discolored with pencil inscriptions on the reverse. There edges of the board are weak and brittle. The image has yellowed overall, especially in the highlight areas. There is silvering (?) in the dark areas of the image. The edges of the image are abraded and scratched from the frame. The surface is moderate to severe.

Recommended Conservation Treatment Plan

- Provide written and photographic documentation of condition before and after treatment.
- Reduce surface soil using dry cleaning techniques as possible.
- Consolidate brittle edges with an appropriate consolidant for stabilization.
- If the matting and framing option is not chosen, place the crayon enlargement in a custom-fitted archival box to the dimensions of the object. Title. (Unless otherwise changed, title will appear as on attached sheet.)

Optional Work

Matting/Framing

- The object will be attached to a 100% cotton rag primary backing board with Japanese paper hinges/ photo corners of MicroChamber paper and Filmoplast P90 archival tape.
- An oval shaped spacer mat made of 100% cotton rag board will be cut and hinged to the primary backing board with linen tape.
- The piece will be fitted with a new secondary backing of archival corrugated board.
- The inside and outside of the original frame and convex glass will be cleaned.
- Large areas of loss or damage to the finish of the frame will be toned.
- The mounted and matted piece will be fitted into the existing client frame.
- The back of the frame will be finished with an archival dust cover and hanging hardware.

Price – Object 5 (*See cost summary at end to approve.*)

- Recommended Treatment: $1,240
- Matting/Framing: $480

Cost Summary

Recommended Conservation Treatments	(Please check.)		
Object 1: Certificate for Capt. John P. Townsend, … Civil War	Yes ____	No ____	$2,160
Object 2: Discharge Papers for Private Lewis L. Simpson	Yes ____	No ____	$1,895
Object 3: Certificate for Lewis L. Simpson, …Civil War	Yes ____	No ____	$1,860
Object 4: Certificate of Appointment …Women's Relief Corp	Yes ____	No ____	$665
Object 5: Portrait of Lewis Simpson	Yes ____	No ____	$1,240
Shipping/Handling – return via client pick up	Yes ____	No ____	$0
Total – Recommended			$7,820

Optional Work (These can only be carried out if the corresponding treatment above is also selected.)

Matting - Object 1: Certificate for Capt. John P. Townsend, … Civil War	Yes ____	No ____	$175
Matting/Framing - Object 2: Discharge Papers for Private Lewis L. Simpson	Yes ____	No ____	$375
Matting - Object 3: Certificate for Lewis L. Simpson, …Civil War	Yes ____	No ____	$175
Matting/Framing - Object 4: Object 4: Certificate of Appointment …Women's Relief Corp	Yes ____	No ____	$490
Matting/Framing - Object 5: Portrait of Lewis Simpson	Yes ____	No ____	$480
Additional Insurance (indicate value in Terms, below)	Yes ____	No ____	$1/$1,000/mo.

Terms & Conditions

It is understood and agreed between the parties to this agreement that the work may be halted should unexpected problems render the proposed scope and/or activities infeasible or more time-consuming than could be reasonably estimated. If this were to occur, modifications to the scope and/or activities may be proposed, and, after consultation with the Owner or Authorized Agent, a new estimate may be given to reflect revised specifications. **Estimates are valid for 12 months. Costs of shipping/handling and unframing/reframing services are additional. NOTE: One third of the estimated cost is payable at the time of approval.**

Pick-up or shipping/handling of objects shall be at Client's/Owner's expense and must occur within 90 days after either notification of completion of work or notification that objects associated with unapproved proposals must be picked up (or delivery effected). All charges for contracted services, including shipping/handling and insurance, must be paid prior to NEDCC releasing objects for return. **Storage fees of $125.00 per month shall be charged after expiration of the 90-day period. In consideration for waiver of such storage charges, failure of Client/Owner to pick up (or effect delivery) within six months of a third notification or attempted notification by NEDCC by certified mail at Client's/Owner's last known address shall constitute transfer of title of objects to NEDCC.** Long-term arrangements for storage at a fee must be made by separate agreement to avoid such transfer of title. Client/Owner must inform NEDCC of any changes of address.

CLIENT'S/OWNER'S STATEMENT OF INSURANCE VALUE: Maximum liability limited to $_____. Unless Owner's insurance policy provides standard "all risk perils" and Owner's insurance company sends NEDCC a waiver of subrogation, all objects left at NEDCC must be insured under NEDCC's policy at a rate of $1.00 per month per $1,000 of value. If no valuation is provided by Owner, an assignment of $500 will be placed on the project for insurance coverage purposes.

THE UNDERSIGNED AGREES TO INDEMNIFY AND HOLD NEDCC HARMLESS FROM ALL CLAIMS AND DEMANDS FOR LOSS OR DAMAGE TO THE ABOVE OBJECTS HOWEVER OCCASIONED UNLESS DUE TO THE WILLFUL NEGLIGENCE OF NEDCC. IN NO EVENT SHALL NEDCC BE LIABLE TO ANY PARTY FOR ANY SPECIAL, PUNITIVE, INDIRECT, INCIDENTAL, OR CONSEQUENTIAL DAMAGES.

The undersigned recognizes that conservation treatment procedures may involve a certain amount of risk. Therefore, in further consideration, and as a condition of NEDCC's undertaking the work on the above object(s), the undersigned waives and releases NEDCC from all claims that may arise due to damage or loss to the above object(s) as a result of the treatment procedure(s).

NEDCC represents that it is not the Owner of objects that will be digitized and Client/Owner agrees that NEDCC is not responsible for any potential or real copyright infringement as a result of digitizing the objects. Compliance with copyright law is the sole

responsibility of Client/Owner. NEDCC hereby conveys copyright, if any, in the digital objects to Client/Owner. The undersigned hereby grants permission to NEDCC to use the record of the proposed work, including imagery, for its educational programs.

AUTHORIZATION IS HEREBY GIVEN to the NORTHEAST DOCUMENT CONSERVATION CENTER to treat and/or digitize the above object(s). It is acknowledged that the undersigned has read and understands the proposal and all terms and conditions herein.

Owner or Authorized Agent — Date

12/27/21

Michael K. Lee, Director of Paper and Photograph Conservation, NEDCC — Date

P.O.# required? Yes _____ No _____ # _____

Project # 21-340_PF
MKL/KB/MCF/AH

Page 8 of 8

Return to Table of Contents

4.16 Quote from NEDCC

Quote for Town records books without inactive mold.

NEDCC
NORTHEAST DOCUMENT CONSERVATION CENTER

100 Brickstone Square, Andover, MA 01810-1494
ph 978-470-1010 • fax 978-475-6021 • www.nedcc.org

February 11, 2022

Allyson Sekerke
Bridgewater Public Library
15 South Street
Bridgewater, MA 02324

Re: NEDCC Job #22-031_BI

Dear Ms. Sekerke,

Enclosed is our condition report and estimate for the treatment of four record books, including a digital imaging addendum.

- The recommended conservation treatment is listed in the body of the proposal and we consider each step of the recommended treatment necessary for preservation of the objects. The conservators at the Northeast Document Conservation Center work as efficiently and safely as possible and within guidelines set by the American Institute for Conservation.
- Please note that there are several places in the proposal where we ask that you check a box to indicate a preference for how you would like us to proceed under certain conditions.
- Once the work begins, should we encounter the unexpected and need to revise this treatment proposal you will be consulted immediately.
- Please enter the appropriate insured value in the space provided. Unless your insurance company sends NEDCC a waiver of subrogation, all objects left here will be insured under our policy. If no insurance figure is received from you, we shall assign a value of $500 to the project.
- If you want NEDCC to proceed with the recommended treatment, please sign the proposal and return it with your 33% deposit at your earliest convenience.

We hope to hear from you soon. Please do not hesitate to call if you have questions. We are happy to answer inquiries about scheduling or the treatment or care of objects.

Sincerely,

Bexx Caswell-Olson,
Director of Book Conservation, NEDCC

Project Application
Community Preservation Committee
Bridgewater, MA

NEDCC
NORTHEAST DOCUMENT CONSERVATION CENTER

100 Brickstone Square, Andover, MA 01810-1494
ph 978-470-1010 • fax 978-475-6021 • www.nedcc.org

Bridgewater Public Library
15 South Street
Bridgewater, MA 02324

February 11, 2022
Project # 22-031_BI

Contact: Allyson Sekerke
asekerke@sailsinc.org
(817) 905-6265

Object 1
record book
Title: Records of Bridgewater, Vol. 1, 1656 to 1702

Dimensions: 380x157x20mm
No. of Pages: ~175
Call No.: #191

Current Condition
The half leather binding with decorated paper sides is dirty, worn, stained, and abraded. The leather is desiccated, the headcap is torn, and there are losses to the cover material. A paper label with a manuscript title is adhered overall to the front cover. A pressure sensitive label is adhered to the spine using pressure sensitive tape.

The text block consists of handmade laid paper, gathered into sections and sewn through the fold. The sewing is intact. Entries are in various manuscript inks. Some inks are friable or water soluble and aqueous treatment is not recommended.

The pages have surface dirt, embedded grime, minor tears, losses, glassine tape, and old mends throughout. Some old mends and tapes cover text, making it illegible. Some manuscript text is written on top of old mends. The last leaf has been lined with Western paper and is folded to fit within the volume. Although inelegant, this repair is stable.

Conservation Treatment Plan

- Provide written and photographic documentation before and after treatment.
- Surface clean pages to reduce surface dirt.
- Test solubility of media.
- Treat as necessary to remove old mends and glassine tape that obscures text (~68"). Mends that do not obscure text or that have text written on top will not be removed.
- Mend tears (~123) as necessary using Japanese paper and starch paste.
- Repair torn headcap with Japanese paper toned with acrylic pigments.
- Reinforce board corners.
- Construct a custom-fitted archival box to dimensions of volume. Title box. (Unless otherwise changed, title will appear as on attached sheet.)

Optional Work

Digital Imaging/Printing
The optimal time to perform digital imaging of your volume(s) is during conservation so that the best image capture can be obtained in the safest manner. Please see the attached Imaging Addendum for imaging specifications and cost estimate(s).

Price – Object 1 (*See cost summary at end to approve.*)
- Recommended Treatment: $8,530

Object 2
record book
Title: Records of the Purchasers of Bridgewater, Book 1

Dimensions: 300x195x43mm
No. of Pages: ~374
Call No.: 133

Current Condition
The full suede binding is dirty, worn, stained and abraded. The upper joint is partially broken and the endcaps are torn. The board corners are exposed and delaminating. A paper label with manuscript title is adhered overall to the front cover. A pressure sensitive label is adhered to the spine with pressure sensitive tape; the label is loose. The inner hinges have been reinforced with cloth tape. A manuscript note on the front pastedown extends onto the cloth tape.

The text block consists of handmade laid paper, gathered into sections and sewn through the fold. The sewing is broken. Entries are in various manuscript inks. Some inks are friable or water soluble and aqueous treatment is not recommended. An index written on machine-made paper was added in 1862. The pages have surface dirt, embedded grime, staining, minor tears, losses, and old repairs throughout. Old repairs were done with Western paper, and sometimes cover text. Some text has been written on top of old mends. Some text in the inner margins is difficult to access. The page edges are chipped and fragile, and many tears extend into the text creating losses. Safe handling is extremely difficult.

Conservation Treatment Plan
- Provide written and photographic documentation before and after treatment.
- Collate (number each leaf discreetly in pencil to record order).
- Disbind (remove sewing and separate sections).
- Surface clean pages to reduce surface dirt.
- Test solubility of media.
- Treat as necessary to remove cloth tape from inner hinges and reduce adhesive staining. Cloth tape with manuscript text will be left in place.
- Treat as necessary to remove ~12" of old mends that obscure text.
- Mend tears (~381) and guard folds as necessary using Japanese paper and starch paste.
- Reassemble text and press to consolidate.
- Add handmade paper endsheets with linen hinges and sew text block with linen thread.
- Repair binding by rebacking using airplane linen and Japanese paper toned with acrylic pigments. The original spine piece will be reused.
- Reinforce board corners
- Construct a custom-fitted archival box to dimensions of volume. Title box. (Unless otherwise changed, title will appear as on attached sheet.)

Project # 22-031 BI
BCCFTD

Page 2 of 10

Optional Work

Digital Imaging/Printing
The optimal time to perform digital imaging of your volume(s) is during conservation so that the best image capture can be obtained in the safest manner. Please see the attached Imaging Addendum for imaging specifications and cost estimate(s).

Price – Object 2 (*See cost summary at end to approve.*)
- Recommended Treatment: $17,960

Object 3
record book
Title: Records of the Purchasers of Bridgewater, Book 2

Dimensions: 320x205x42mm
No. of Pages: ~385
Call No.: 132

Current Condition
The full suede binding is dirty, worn, stained, and abraded. The front joint is partially broken, the endcaps are torn, and the board corners are exposed and delaminating. A paper label with manuscript title is adhered overall to the front cover. A pressure sensitive label is adhered to the spine with pressure sensitive tape.

The text block consists of handmade laid paper, gathered into sections and sewn through the fold. The sewing is intact but loose, and the text block is at risk of splitting at pages 171-172, 191-199, 333-334. A manuscript index on machine-made paper was added to the volume in 1862. The index was sewn through the fold and attached to the volume using cloth tape. The tape covers text on the first leaf of the manuscript. Entries on the last page of the index are written on top of the tape. Several pages of machine-made paper with manuscript text were added to the back of the volume in 1875. The added thickness of the added pages at the front and back of the volume is putting stress on the spine, and the text block protrudes from the bindings along the fore edge. This has caused many pages to become damaged along the edges.

Some leaves at the front and back of the volume have been tipped together and the opening is restricted. The pages have surface dirt, embedded grime, edge tears, and minor tears throughout. Some pages have been repaired with cloth or paper tape. A loose document has been adhered to page 152. The document is partially detached, creased, and torn. Entries are in various manuscript inks. Some inks are friable or water soluble, and aqueous treatment is not recommended. Some text in the inner margins is inaccessible.

Conservation Treatment Plan
- Provide written and photographic documentation before and after treatment.
- Collate (confirm order and completeness of volume, number unnumbered pages discretely in pencil to record order).
- Disbind (remove cover, remove sewing).
- Surface clean pages to reduce surface dirt.
- Test solubility of media.
- Treat as necessary to remove ~115' of cloth tape and separate the added index from the text block. Tape with entries written on top will be left in place.
- Treat as necessary to separate tipped pages.

Project # 22-031_BI
BCO/TD

Page 3 of 10

- Mend tears (~134) and guard folds as necessary using Japanese paper and starch paste.
- Repair and reattach document on page 152.
- Reassemble text and press to consolidate.
- Add handmade paper endsheets with linen hinges and sew text block with linen thread. Please note: pages added in 1862 and 1875 will not be included.
- Repair binding by reinforcing torn areas with Japanese paper toned with acrylic pigments. Reattach original binding to text block.
- Reinforce board corners.
- Sew index through the fold using linen thread. Place in a buffered folder.
- Place added leaves removed from the back of the volume in a buffered folder.
- Construct a custom-fitted archival box to dimensions of volume and foldered leaves. Title box. (Unless otherwise changed, title will appear as on attached sheet.)

Optional Work

Digital Imaging/Printing
The optimal time to perform digital imaging of your volume(s) is during conservation so that the best image capture can be obtained in the safest manner. Please see the attached Imaging Addendum for imaging specifications and cost estimate(s).

Price – Object 3 (*See cost summary at end to approve.*)
- Recommended Treatment: $13,510

Object 4
record book
Title: Records of the Purchasers of Bridgewater, Book 3

Dimensions: 370x240x44mm
No. of Pages: ~400
Call No.: 176

Current Condition
The full suede binding is dirty, worn, stained, and abraded. The endcaps are torn and the board corners are exposed and delaminating. A paper label with manuscript title is adhered overall to the front cover. A pressure sensitive label is adhered to the spine with pressure sensitive tape.

The text block consists of handmade laid paper, gathered into sections and sewn through the fold. The sewing is loose and the text block has split in several places. Entries are in various manuscript inks. Some inks are friable or water soluble and aqueous treatment is not recommended. A manuscript index on machine-made paper was added to the front of the volume in 1862. A second undated document on machine-made paper was adhered into the volume after the index. A third addition, also on machine-made paper, is adhered into the back of the volume. The added thickness of these pages has pushed the cover out of position, and the fore edge of the volume is no longer protected. Added pages were adhered in using cloth tape, which is causing stress to the pages. Many pages at the front of the volume are tipped together.

The pages have surface dirt, embedded grime, minor tears, creases, edge tears, losses, and old mends throughout. Old mends were done with Western paper and sometimes cover text. The page edges are chipped and safe handling is difficult.

Project # 22-031_B1
DCO/TD

Page 4 of 10

Project Application
Community Preservation Committee
Bridgewater, MA

Conservation Treatment Plan

- Provide written and photographic documentation before and after treatment.
- Collate (confirm order and completeness of volume, number unnumbered pages discreetly in pencil to record order).
- Disbind (remove cover, retain sewing as possible).
- Surface clean pages to reduce surface dirt.
- Test solubility of media.
- Treat as necessary to remove cloth tape and old mends that obscure text or put stress on the pages (~ 57"). Old mends that do not obscure text will be left in place. Added pages at the front and back of the volume will be removed.
- Treat as necessary to separate tipped pages.
- Mend tears (~193) and guard folds as necessary using Japanese paper and starch paste.
- Reassemble text and press to consolidate.
- Add handmade paper endsheets with linen hinges and reinforce sewing or resew text block with linen thread.
- Repair endcaps using Japanese paper toned with acrylic pigments.
- Reattach original cover to text block.
- Reinforce board corners.
- For the index and added leaves at the back of the volume, sew through the fold using a pamphlet stitch. Place each gathering of pages in a buffered folder.
- Place loose document from the front of the volume in a buffered folder.
- Construct a custom-fitted archival box to dimensions of volume and foldered documents. Title box. (Unless otherwise changed, title will appear as on attached sheet.)

Optional Work

Digital Imaging/Printing
The optimal time to perform digital imaging of your volume(s) is during conservation so that the best image capture can be obtained in the safest manner. Please see the attached Imaging Addendum for imaging specifications and cost estimate(s).

Price – Object 4 (*See cost summary at end to approve.*)

- Recommended Treatment: $15,560

Cost Summary

	(Please check.)		
Recommended Conservation Treatments			
Object 1: Records of Bridgewater, Vol. 1, 1656 to 1702	Yes	No ____	$8,530
Object 2: Records of the Purchasers of Bridgewater, Book 1	Yes ____	No ____	$17,960
Object 3: Records of the Purchasers of Bridgewater, Book 2	Yes ____	No ____	$13,510
Object 4: Records of the Purchasers of Bridgewater, Book 3	Yes ____	No ____	$15,560
Shipping/Handling – return via client pick up	Yes ____	No ____	$0
TOTAL (if all checked "yes")	Yes ____	No ____	$55,560

Optional Work (These can only be carried out if the corresponding treatment above is also selected.)

Digital Imaging/Printing	Yes ____	No ____	See addendum
Additional Insurance (indicate value in Terms, below)	Yes ____	No ____	$1/$1,000/mo.

Project # 22-031 BI
BCO/TD

Page 5 of 10

Project Application
Community Preservation Committee
Bridgewater, MA

Terms & Conditions

It is understood and agreed between the parties to this agreement that the work may be halted should unexpected problems render the proposed scope and/or activities infeasible or more time-consuming than could be reasonably estimated. If this were to occur, modifications to the scope and/or activities may be proposed, and, after consultation with the Owner or Authorized Agent, a new estimate may be given to reflect revised specifications. **Estimates are valid for 12 months. Costs of shipping/handling and unframing/reframing services are additional. NOTE: One third of the estimated cost is payable at the time of approval.**

Pick-up or shipping/handling of objects shall be at Client's/Owner's expense and must occur within 90 days after either notification of completion of work or notification that objects associated with unapproved proposals must be picked up (or delivery effected). All charges for contracted services, including shipping/handling and insurance, must be paid prior to NEDCC releasing objects for return. **Storage fees of $125.00 per month shall be charged after expiration of the 90-day period. In consideration for waiver of such storage charges, failure of Client/Owner to pick up (or effect delivery) within six months of a third notification or attempted notification by NEDCC by certified mail at Client's/Owner's last known address shall constitute transfer of title of objects to NEDCC.** Long-term arrangements for storage at a fee must be made by separate agreement to avoid such transfer of title. Client/Owner must inform NEDCC of any changes of address.

CLIENT'S/OWNER'S STATEMENT OF INSURANCE VALUE: Maximum liability limited to $_____. Unless Owner's insurance policy provides standard "all risk perils" and Owner's insurance company sends NEDCC a waiver of subrogation, all objects left at NEDCC must be insured under NEDCC's policy at a rate of $1.00 per month per $1,000 of value. If no valuation is provided by Owner, an assignment of $500 will be placed on the project for insurance coverage purposes.

THE UNDERSIGNED AGREES TO INDEMNIFY AND HOLD NEDCC HARMLESS FROM ALL CLAIMS AND DEMANDS FOR LOSS OR DAMAGE TO THE ABOVE OBJECTS HOWEVER OCCASIONED UNLESS DUE TO THE WILLFUL NEGLIGENCE OF NEDCC. IN NO EVENT SHALL NEDCC BE LIABLE TO ANY PARTY FOR ANY SPECIAL, PUNITIVE, INDIRECT, INCIDENTAL, OR CONSEQUENTIAL DAMAGES.

The undersigned recognizes that conservation treatment procedures may involve a certain amount of risk. Therefore, in further consideration, and as a condition of NEDCC's undertaking the work on the above object(s), the undersigned waives and releases NEDCC from all claims that may arise due to damage or loss to the above object(s) as a result of the treatment procedure(s).

NEDCC represents that it is not the Owner of objects that will be digitized and Client/Owner agrees that NEDCC is not responsible for any potential or real copyright infringement as a result of digitizing the objects. Compliance with copyright law is the sole responsibility of Client/Owner. NEDCC hereby conveys copyright, if any, in the digital objects to Client/Owner. The undersigned hereby grants permission to NEDCC to use the record of the proposed work, including imagery, for its educational programs.

AUTHORIZATION IS HEREBY GIVEN to the NORTHEAST DOCUMENT CONSERVATION CENTER to treat and/or digitize the above object(s). It is acknowledged that the undersigned has read and understands the proposal and all terms and conditions herein.

Owner or Authorized Agent — Date

2/11/2022

Bexx Caswell-Olson, Director of Book Conservation, NEDCC — Date

P.O.# required? Yes ____ No _____ # _____

Project # 22-031_BI
BCO/TD

Page 6 of 10

IMAGING ADDENDUM

Subject to Conservation
The condition of historic and artistic objects is one of the most important factors in determining how (or whether) they can be accurately imaged without causing physical damage. Consequently, this imaging addendum is subject to prior conservation treatment under this proposal.

Image Count
The "image count" corresponds to the number of digital files that will be produced (e.g., one leaf equals two pages, resulting in two digital image files; imaging "two-up" results in one digital image file per two pages; the recto and verso of a photograph each equal one digital image file, etc.). This proposal is based on an estimated count of 1430 images. *Please check the appropriate box,* below, to indicate how you would like us to proceed if the image count differs from this estimate.

☐ Complete the imaging of all items and adjust the invoice accordingly based on the actual image count.
☐ Proceed with imaging up to a maximum of 10% over the estimated image count and adjust the invoice accordingly. Please notify me if/when you have reached this limit.
☐ Image the items in the priority order provided and stop imaging once the estimated image count is reached. Please notify me if/when you have reached this limit.

Blank Pages/Versos
We will image the front and back covers, the recto and verso of all leaves with content, and occasional blank leaves

Project Scope

Following accepted best practices, the purpose of our service is to create a faithful image surrogate of archival materials in their current condition. Minor post-processing adjustments will be performed to optimize image quality and bring all images to a common rendition.

The object(s) identified above will be imaged using a high resolution digital camera with apochromatic macro flat field optics on our specialized workstations. The light source will be Broncolor electronic flash, providing optimal light quality at minimal total light exposure. Imaging will be done following the Federal Agencies Digitization Guidelines Initiative (FADGI) *Technical Guidelines for Digitizing Cultural Heritage Materials* (2010) and the following project specifications:

Preservation Master(s)
Format: TIFF
Spatial Resolution: 400 ppi at original size
Bit Depth: 16-bit
Color Profile: Adobe RGB 1998

Access Derivative(s)
Format: JPEG
Spatial Resolution: 400 ppi at original size
Bit Depth: 8-bit

Color Profile: Adobe RGB 1998

PDF(s)
Each volume will be combined into one multipage PDF.

Targets
An Image Science Associates (ISA) Object-Level Target will be used as a photographic reference standard during the course of imaging reflective material. ISA Object-Level Targets include: 18 color patches of varying hues, saturations, and brightnesses; 12 spectrally neutral gray patches; vertical and horizontal slant edge targets for calculating spatial frequency response (SFR); and metric- and English-based rulers for scale and calculating optical resolution.

Cropping
Reflective media will be cropped to include a small border around the edges of the object. Reference targets will be removed in the final deliverable files.

Metadata
Technical metadata comprising camera and software information will be embedded in the header of each TIFF master file.

File Naming
Files will be named with a descriptive prefix plus sequential numerical suffix.

Special Conditions
Spatulas and/or weights may be used to gently hold down pages that do not lie flat on their own. The spatulas/weights will remain in the image files, unless you choose to have them removed digitally for an extra cost.

Quality Control
All work will be performed under tight environmental control in the NEDCC imaging laboratory by highly-skilled professionals, and objects will remain in the NEDCC vault when not being imaged. NEDCC performs a 100% inspection of deliverables, done by Associate and Senior Photographers. All files will be backed up on NEDCC's servers for six (6) months after project completion.

Delivery Medium
The digital file(s) will be delivered on a USB external hard drive.

Cost Summary

Project Scope	(Please check.)		$/Unit	Quantity	Total
Project Set-up			$150.00	1 set-up	$150.00
Object 1: Preservation Masters	Yes ____	No ____	$5.00	180 files	$900.00
Object 2: Preservation Masters	Yes ____	No ____	$4.00	410 files	$1640.00
Object 3: Preservation Masters	Yes ____	No ____	$4.00	410 files	$1640.00
Object 4: Preservation Masters	Yes ____	No ____	$5.00	430 files	$2150.00
Access Derivatives	Yes ____	No ____	$0.00	1430 files	$0.00
PDFs	Yes ____	No ____	$0.00	4 files	$0.00
USB External Hard Drive.				1 drive	$100
TOTAL (if all checked "Yes")					$6580.00

NOTE: Please return to the Cost Summary on Page 5 and select "Yes" or "No" for Digital Imaging.

Project # 22-031 BI
BCO/TD

Page 8 of 8

Project Application
Community Preservation Committee
Bridgewater, MA

TITLE SHEET

Client: Bridgewater Public Library Job No: 0 Item No: 1

Title information will appear as illustrated below. Any revisions should be made in the space provided. Please sign the sheet and return with signed revision authorization form. The recommended title will be used if the revision form is not returned

Client Signature: _____ **Date:** _____

BOOK:

☐ Probable label placement (see diagram below)

Recommended title:

Client's revision:

BOX:

☒ Probable label placement (see diagram below)

Recommended title:

RECORDS OF BRIDGEWATER – VOL. 1 – 1656-1702

Client's revision:

LABEL PLACEMENTS:

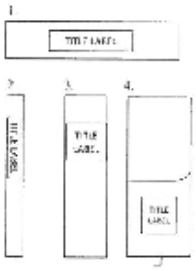

1. Horizontal label along spine.

2. Vertical label along spine (used if volume or box is too thin to label across spine).

3. Horizontal label across spine.

4. Horizontal label across spine on a flip-top box.

Notes:

Project Application
Community Preservation Committee
Bridgewater, MA

TITLE SHEET

Client: Bridgewater Public Library Job No: 22-191_039 Item No: 2

Title information will appear as illustrated below. Any revisions should be made in the space provided. Please sign the sheet and return with signed treatment authorization form. The recommended title will be used if the revision form is not returned.

Client Signature: _____ **Date:** _____

BOOK:

☐ Probable label placement (see diagram below)

Recommended title:

Client's revision:

BOX:

☒ Probable label placement (see diagram below)

Recommended title:

RECORDS
OF THE
PURCHASERS
OF
BRIDGEWATER
--
BOOK 1

Client's revision:

LABEL PLACEMENTS:

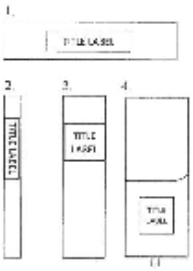

1. Horizontal label along spine.

2. Vertical label along spine (used if volume or box is too thin to label across spine)

3. Horizontal label across spine.

4. Horizontal label across spine on a flip-top box.

Notes:

Project Application
Community Preservation Committee
Bridgewater, MA

TITLE SHEET

Client: Bridgewater Public Library Job No: 23-31_003 Item No: 3

Title information will appear as illustrated below. Any revisions should be made in the space provided. Please sign the sheet and return with signed treatment authorization form. The recommended title will be used if the revision form is not returned.

Client Signature: _____ **Date:** _____

BOOK:

☐ Probable label placement (see diagram below)

Recommended title:

Client's revision:

BOX:

☐ 3 Probable label placement (see diagram below)

Recommended title:

RECORDS
OF THE
PURCHASERS
OF
BRIDGEWATER
BOOK 2

Client's revision:

LABEL PLACEMENTS:

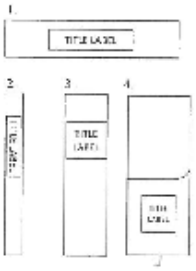

1. Horizontal label along spine.

2. Vertical label along spine (used if volume or box is too thin to label across spine).

3. Horizontal label across spine.

4. Horizontal label across spine on a flip-top box.

Notes:

Project Application
Community Preservation Committee
Bridgewater, MA

TITLE SHEET

Client: Bridgewater Public Library Job No: 22-31_001 Item No: 4

Title information will appear as illustrated below. Any revisions should be made in the space provided. Please sign the sheet and return with signed treatment authorization form. The recommended title will be used if the revision form is not returned.

Client Signature: _____ **Date:** _____

BOOK:

☐ Probable label placement (see diagram below)

Recommended title:

Client's revision:

BOX:

☒ Probable label placement (see diagram below)

Recommended title:

RECORDS
OF THE
PURCHASERS
OF
BRIDGEWATER
-
BOOK 3

Client's revision:

LABEL PLACEMENTS:

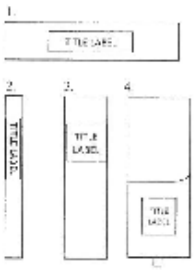

1. Horizontal label along spine.

2. Vertical label along spine (used if volume or box is too thin to label across spine).

3. Horizontal label across spine.

4. Horizontal label across spine on a flip-top box.

Notes:

[Return to Table of Contents]

4.17 Quote from NEDCC

Quote for town records book with inactive mold.

NEDCC
NORTHEAST DOCUMENT CONSERVATION CENTER

100 Brickstone Square, Andover, MA 01810-1494
ph 978-470-1010 • fax 978 475-6021 • www.nedcc.org

January 19, 2022

Allyson Sekerke
Bridgewater Public Library
Archives and Special Collections
15 South Street
Bridgewater, MA 02324

Re: NEDCC Job #21-341_BI

Dear Ms. Sekerke,

Enclosed is our condition report and estimate for the treatment of one record book, including a digital imaging addendum.

- The recommended conservation treatment is listed in the body of the proposal and we consider each step of the recommended treatment necessary for preservation of the object. The conservators at the Northeast Document Conservation Center work as efficiently and safely as possible and within guidelines set by the American Institute for Conservation.
- Work that is desirable, but not necessary, appears in the proposal as an option with additional cost. Please check yes/no to approve/decline the optional work.
- Please note that there are several places in the proposal where we ask that you check a box to indicate a preference for how you would like us to proceed under certain conditions.
- Once the work begins, should we encounter the unexpected and need to revise this treatment proposal you will be consulted immediately.
- Please enter the appropriate insured value in the space provided. Unless your insurance company sends NEDCC a waiver of subrogation, all objects left here will be insured under our policy. If no insurance figure is received from you, we shall assign a value of $500 to the project.
- If you want NEDCC to proceed with the recommended treatment, please sign the proposal and return it with your 33% deposit at your earliest convenience.

We hope to hear from you soon. Please do not hesitate to call if you have questions. We are happy to answer inquiries about scheduling or the treatment or care of objects.

Sincerely,

Bexx Caswell-Olson,
Director of Book Conservation, NEDCC

Project Application
Community Preservation Committee
Bridgewater, MA

NEDCC
NORTHEAST DOCUMENT CONSERVATION CENTER

100 Brickstone Square, Andover, MA 01810-1494
ph 978-470-1010 • fax 978-475-6021 • www.nedcc.org

Bridgewater Public Library
Archives and Special Collections
15 South Street
Bridgewater, MA 02324

Contact: Allyson Sekerke
asekerke@sailsinc.org
(817) 905-6265

January 19, 2022
Project # 21-341_BI

Object
record book
Title: Records of the Purchases od Bridgewater, Book 4

Dimensions: 320x213x60mm
No. of Pages: -76 with entries, the rest blank

Current Condition
The hardcover parchment binding is dirty, worn, abraded, and stained. The boards are lightly warped. A manuscript title is written directly on the spine. A manuscript paper title label is adhered to the cover. The label is partially detached, curled, and torn. A pressure sensitive shelf number label is adhered to the spine and has been reinforced with pressure sensitive tape. The joints of the cover are partially broken and one of the parchment lacings at the spine is broken. The board corners are bent. The front inner hinge has been repaired with paper tape. The tape is lifting in some areas. The back hinge is partially broken. The pastedowns are dirty and have inactive mold; inactive mold is worse at the back of the volume.

The text block consists of handmade wove paper, gathered into sections and sewn through the fold onto parchment supports. The sewing is intact. Entries are written in manuscript ink. The pages have surface dirt, embedded grime, creases, and minor tears throughout. Pages after 76 are blank. Many blank pages contain adhesive stains where documents were once adhered using pressure sensitive tape. The documents are no longer present in those locations. Approximately 16 loose documents are laid-in through the numbered pages, but based on adhesive stains on the documents, were probably originally located elsewhere in the binding. The documents have surface dirt, creases, minor tears, pressure sensitive tape, and adhesive stains. Pages 3-4 and several pages at the back of the volume have been intentionally removed from the binding and are no longer present.

Conservation Treatment Plan

- Provide written and photographic documentation before and after treatment.
- Collate (number each loose document discreetly in pencil to record order).
- Vacuum binding and pages where necessary to remove mold.
- Surface clean binding and pages to reduce surface dirt.
- Treat as necessary to remove paper tape from front hinge.
- Remove pressure sensitive tape from spine and readhere label with an appropriate adhesive.

Project # 21-341_BI
BCO/TD

Page 1 of 7

- Mend tears to pages and documents (~61) as necessary using Japanese paper and starch paste.
- Reinforce joints with broken lacing with Japanese paper.
- Reattach loose label and cover material.
- Place loose documents in buffered folders.
- Construct a custom-fitted archival box to dimensions of volume and foldered documents. Title box. (Unless otherwise changed, title will appear as on attached sheet.)

Optional Work

Option 1

- Treat as necessary to remove ~108" of pressure-sensitive tape from documents and reduce adhesive staining. Please note: adhesive staining will not be removed from blank pages unless Option 2 is selected.

Option 2

- Treat as necessary to reduce ~108" of adhesive staining on blank pages.

Digital Imaging/Printing

The optimal time to perform digital imaging of your volume(s) is during conservation so that the best image capture can be obtained in the safest manner. Please see the attached Imaging Addendum for imaging specifications and cost estimate(s).

Cost Summary

Recommended	(Please check.)		
Conservation treatment	Yes ___	No ___	$3,925
Shipping/Handling – return via client pick up	Yes ___	No ___	$0

Optional Work (These can only be carried out if the corresponding treatment above is also selected.)

Option 1	Yes ___	No ___	$2,090
Option 2	Yes ___	No ___	$2,090
Digital Imaging/Printing	Yes ___	No ___	See addendum
Additional Insurance (indicate value in Terms, below)	Yes ___	No ___	$1/$1,000/mo.

Terms & Conditions

It is understood and agreed between the parties to this agreement that the work may be halted should unexpected problems render the proposed scope and/or activities infeasible or more time-consuming than could be reasonably estimated. If this were to occur, modifications to the scope and/or activities may be proposed, and, after consultation with the Owner or Authorized Agent, a new estimate may be given to reflect revised specifications. **Estimates are valid for 12 months. Costs of shipping/handling and unframing/reframing services are additional. NOTE: One third of the estimated cost is payable at the time of approval.**

Pick-up or shipping/handling of objects shall be at Client's/Owner's expense and must occur within 90 days after either notification of completion of work or notification that objects associated with unapproved proposals must be picked up (or delivery effected). All charges for contracted services, including shipping/handling and insurance, must be paid prior to NEDCC releasing objects for return. **Storage fees of $125.00 per month shall be charged after expiration of the 90-day period. In consideration for waiver of such storage charges, failure of Client/Owner to pick up (or effect delivery) within six months of a third notification or attempted notification by NEDCC by certified mail at Client's/Owner's last known address shall constitute transfer of title of objects to NEDCC.** Long-term arrangements for storage at a fee must be made by separate agreement to avoid such transfer of title. Client/Owner must inform NEDCC of any changes of address.

CLIENT'S/OWNER'S STATEMENT OF INSURANCE VALUE: Maximum liability limited to $_____. Unless Owner's insurance policy provides standard "all risk perils" and Owner's insurance company sends NEDCC a waiver of

subrogation, all objects left at NEDCC must be insured under NEDCC's policy at a rate of $1.00 per month per $1,000 of value. If no valuation is provided by Owner, an assignment of $500 will be placed on the project for insurance coverage purposes.

THE UNDERSIGNED AGREES TO INDEMNIFY AND HOLD NEDCC HARMLESS FROM ALL CLAIMS AND DEMANDS FOR LOSS OR DAMAGE TO THE ABOVE OBJECTS HOWEVER OCCASIONED UNLESS DUE TO THE WILLFUL NEGLIGENCE OF NEDCC. IN NO EVENT SHALL NEDCC BE LIABLE TO ANY PARTY FOR ANY SPECIAL, PUNITIVE, INDIRECT, INCIDENTAL, OR CONSEQUENTIAL DAMAGES.

The undersigned recognizes that conservation treatment procedures may involve a certain amount of risk. Therefore, in further consideration, and as a condition of NEDCC's undertaking the work on the above object(s), the undersigned waives and releases NEDCC from all claims that may arise due to damage or loss to the above object(s) as a result of the treatment procedure(s).

NEDCC represents that it is not the Owner of objects that will be digitized and Client/Owner agrees that NEDCC is not responsible for any potential or real copyright infringement as a result of digitizing the objects. Compliance with copyright law is the sole responsibility of Client/Owner. NEDCC hereby conveys copyright, if any, in the digital objects to Client/Owner. The undersigned hereby grants permission to NEDCC to use the record of the proposed work, including imagery, for its educational programs.

AUTHORIZATION IS HEREBY GIVEN to the NORTHEAST DOCUMENT CONSERVATION CENTER to treat and/or digitize the above object(s). It is acknowledged that the undersigned has read and understands the proposal and all terms and conditions herein.

Owner or Authorized Agent — Date

1/19/2022

Bexx Caswell-Olson, Director of Book Conservation, NEDCC — Date

P.O.# required? Yes _____ No _____ # _____

Project # 21-341_BI
BCO/TD

Page 3 of 7

IMAGING ADDENDUM

Subject to Conservation
The condition of historic and artistic objects is one of the most important factors in determining how (or whether) they can be accurately imaged without causing physical damage. Consequently, this imaging addendum is subject to prior conservation treatment under this proposal.

Image Count
The "image count" corresponds to the number of digital files that will be produced (e.g., one leaf equals two pages, resulting in two digital image files; imaging "two-up" results in one digital image file per two pages; the recto and verso of a photograph each equal one digital image file, etc.). This proposal is based on an estimated count of 100 images. *Please check the appropriate box*, below, to indicate how you would like us to proceed if the image count differs from this estimate.

☐ Complete the imaging of all items and adjust the invoice based on the actual image count.
☐ Proceed with imaging up to a maximum of 10% over the estimated image count and adjust the invoice accordingly. Please notify me if/when you have reached this limit.
☐ Image the items in the priority order provided and stop imaging once the estimated image count is reached. Please notify me if/when you have reached this limit.

Blank Pages/Versos
We will image the front and back covers, the recto and verso of all leaves with content, and occasional blank leaves; extended sections of blank leaves will not be imaged unless otherwise requested.

Project Scope
Following accepted best practices, the purpose of our service is to create a faithful image surrogate of archival materials in their current condition. Minor post-processing adjustments will be performed to optimize image quality and bring all images to a common rendition.

The objects identified above will be imaged using a medium format digital camera with apochromatic macro flat field optics on our specialized workstations. The light source will be Broncolor electronic flash, providing optimal light quality at minimal total light exposure. Imaging will be done following the Federal Agencies Digitization Guidelines Initiative (FADGI) *Technical Guidelines for Digitizing Cultural Heritage Materials* (2016) and the following project specifications:

Preservation Masters
Format: TIFF
Spatial Resolution: 400 ppi at original size
Bit Depth: 16-bit
Color Profile: Adobe RGB 1998

Access Derivatives
Format: JPEG
Spatial Resolution: 400 ppi at original size
Bit Depth: 8-bit
Color Profile: Adobe RGB 1998

PDF
Moderately compressed JPEGs will be combined into one multipage PDF.

Project # 21-341_BI
BCO/TD

Page 4 of 5

Targets
An Image Science Associates (ISA) Object-Level Target will be used as a photographic reference standard during the course of imaging reflective material. ISA Object-Level Targets include: 18 color patches of varying hues, saturations, and brightnesses; 12 spectrally neutral gray patches; vertical and horizontal slant edge targets for calculating spatial frequency response (SFR); and metric- and English-based rulers for scale and calculating optical resolution.

Cropping
Images of reflective media will be cropped to include a small border around the edges of the object. Reference targets will be removed in the final deliverable files.

Metadata
Technical metadata comprising camera and software information will be embedded in the header of each TIFF master file.

File Naming
Files will be named with a descriptive prefix plus sequential numerical suffix.

Quality Control
All work will be performed under tight environmental control in the NEDCC imaging laboratory by highly-skilled professionals, and objects will remain in the NEDCC vault when not being imaged. NEDCC performs a 100% inspection of deliverables, done by Associate and Senior Photographers. All files will be backed up on NEDCC's servers for six (6) months after project completion.

Delivery Medium
The digital files will be delivered on a USB flash drive.

Cost Summary

Project Scope	$/Unit	Quantity	Total
Project Set-up	$200	1 set-up	$200
Preservation Masters	$6	100 files	$600
Access Derivatives	$0	100 files	$0
PDF	$0	1 file	$0
USB Flash Drive	$50	1 drive	$50
TOTAL			$850

NOTE: Please return to the Cost Summary on Page 2 and select "Yes" or "No" for Digital Imaging.

Project # 21-341 BI
BCO/TD

Page 5 of 5

Project Application
Community Preservation Committee
Bridgewater, MA

TITLE SHEET

Client: Bridgewater Public Library Job No: 21-541_01 Item No: 1

Title information will appear as illustrated below. Any revisions should be made in the space provided. Please sign the sheet and return with signed treatment authorization form. The recommended title will be used if the revision form is not returned.

Client Signature: _____ **Date:** _____

BOOK:

☐ Provide label placement (see diagram below)

Recommended title

Client's revision:

BOX:

☒ Provide label placement (see diagram below)

Recommended title:

RECORDS OF PURCHASES OF
BRIDGEWATER
~
BOOK 4

Client's revision:

LABEL PLACEMENTS:

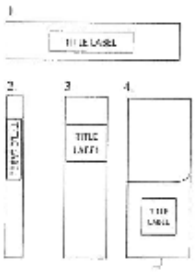

1. Horizontal label along spine.

2. Vertical label along spine (used if volume or box is too thin to label across spine).

3. Horizontal label across spine.

4. Horizontal label across spine on a flip-top box.

Notes:

Return to Table of Contents

4.18 Quote from Conserv

Bridgewater Public Library - MBLC - 6 additional sensors

Quote created on January 31, 2022 - Reference: 20220131-115656562

For Bridgewater Public Library - Allyson Sekerke Show details

Comments

This is for a three year subscription (to align with the August 2021 start of the MBLC program). For that reason you would only pay for the remaining two years. Each subscription year is shown as a line item. Here is what your billing schedule will look like:

2022: $2,156 (8 sensors - 2 from MBLC)

If you renew your subscription, we will send you brand new sensors (the latest technology, freshly calibrated, new batteries). Once these are installed you will send back your old sensors so we can refurbish, recycle, and redistribute them. The two sensors from MBLC will now be part of your annual subscription cost.

2024: $1,760 (8 sensors)
2025: $1,760 (8 sensors)
2026: $1,760 (8 sensors)

(you can pay for these next three years upfront as well with a bulk discount)

Conserv

Products & Services

Conserv Subscription (standard sensors) Our subscription service covers your Conserv Cloud and Smart Collections Sensors for a 3 year contract. Our Smart Collection Sensor is a collections-focused wireless sensor that accurately measures temp, RH, lux, and vibration. Sensors are re-calibrated at no additional cost for collections with an active subscription. Sensor data flows into Conserv Cloud, and analytics for your desktop or mobile phone that keeps your team on top of environmental issues.	6 x $220.00 / year

Conserv Subscription (standard sensors) — 6 x $220.00 / year

Our subscription service covers your Conserv Cloud and Smart Collections Sensors for a 3 year contract. Our Smart Collection Sensor is a collections-focused wireless sensor that accurately measures temp, RH, lux, and vibration. Sensors are re-calibrated at no additional cost for collections with an active subscription. Sensor data flows into Conserv Cloud, and analytics for your desktop or mobile phone that keeps your team on top of environmental issues.

Recurring subtotal	$2,640.00 / year
Pay for 2 years up front	$264.00
Prorate discount (starting 2 months after the August MBLC start date) - (16% off the first year)	$220.00
Total	**$2,156.00**

This quote expires on March 2, 2022.

Questions? Contact me

Melissa King
Senior Conservation Liaison
melissa@conserv.io
+1 (617) 721-4804

Download quote

Print quote

MNMX Corporation (dba Conserv)
5600 9th Avenue South
Birmingham, AL 35212
United States

[Return to Table of Contents]

Project Application
Community Preservation Committee
Bridgewater, MA

4.19 Quote from Donnegan Systems Inc.

Donnegan Systems Inc.
170 Bartlett St.
Northborough MA 01532

800-222-6311-phone
508-393-5601-fax
www.donnegansystems.com

QUOTE DATE January 3, 2022
QUOTE # Q22136
LEAD TIME 16 Weeks ARO

DONNEGAN SYSTEMS, INC.

QUOTATION

Customer	Town of Bridgewater	**Misc.**	
Name	Bridgewater Public Library	**Rep**	Brian Ackley
Address	15 South Street	**Terms**	Balance due upon completion
City	Bridgewater Public Library **State** MA **Zip** 02324	**FOB**	Factory
Phone	(508)697-3331 **Fax**	**Ship Via**	Best Way
Attn:	Allyson Sekerke		

Qty	Description	Unit	TOTAL
	Provide (14) sections of Spacesaver Case Type Library Shelving per floor plan. Provide (9) Mahogany Recessed End Panels and (4) tops End Panels: 3/4" thick African Mahogany veneer panel with 1.25"x3" solid on top and two long edges. The bottom to have 1.25"x6" solid mahogany base. Tops: 3/4" Thick African Mahogany veneer panel with 1/2" buildup on back face. Edgeband all exposed edges with 3/4"x1.25" mahogany. Massachusetts State Contract Pricing Includes: Non Union factory trained installation during normal working hours. Redelivery to the site and trash removal. Non off gasing powder coat paint in choice of (12) standard colors. Dock to dock delivery. Optional Please deduct $4,015. 00 to substitute 3/4" flat mahogany panels with solid wood edge in lieu of recessed panels.		$24,149.40
		Subtotal	$24,149.40
		Freight	Included
		TOTAL	$24,149.40

Customer Acceptance

Name	Bridgewater Public Library				
Address	15 South Street				
City	Bridgeater	**State**	MA	**Zip**	02324
Phone	(508)697-3331	**Fax**			
Attn:	Allyson Sekerke				

Customer responsible for all incurred shipping charges an estimate has been provided

Under any resulting contract, Donnegan will retain a security interest and retain all rights as a secured creditor under the Uniform Commercial Code until all checks have been cleared and payment in full has been received. In event of default, customer shall pay all collection expenses, including attorney fees

Acceptance

Return to Table of Contents

Project Application
Community Preservation Committee
Bridgewater, MA

4.20 Quote from B&H Foto & Electronics Corp.

For audio recording equipment

Government, Education, and Corporate Department
For Pricing Requests, Purchase Orders, and Customer Service:

Phone: 800-947-8003 / 212-239-7503 | Fax: 800-858-5517 / 212-239-7759 | Email: [illegible]

The Professional's Source — 420 Ninth Avenue, New York City, NY 10001 • www.bhphotovideo.com

Prices Are Valid Until: 02/05/22 **Quote No.:** 1078918646
Reference No.: R201202-OMNIA

Sold To: **Rose Mamakos**
Bridgewater Public Library
15 South Street
Attn: Accounts Payable
BRIDGEWATER, MA 02324

Bill Phone: (508)697-3331
Work Phone: (508)697-3331

Date	Customer Code	Terms	Salesperson	Ship Via
01/06/22	B2152030	N/A	WB	FDX GROUND

Qty Ord	Item Description	SKU# MFR#	Item Price	Amount
1	ZOOM ZOOM H6 PORTABLE RECORDER/FIELD PACK/REG	ZOH6K ()	501.94	501.94
	CONSISTS OF:			
	1 ZOOM H6 ALL BLACK HANDY AUDIO RECORDER/REG	ZOH6B (ZH6AB)		
	1 SANDISK ULTRA SDHC 64GB CLASS 10/ 120MBS/REG	SA64GBU4SDHC (SDSDUN4064GN)		
	Price After $ 3.00 Instant Savings Exp. 01/29/22			
	This item currently has a price of $10.49 while supplies last.			
	1 SENAL SMH-1000 STUDIO MONITOR HEADPHONES/REG	SESMH1000 (SMH1000)		
	1 AURAY FUR WINDBUSTER f/ZOOM H4N RECORDER/REG	AUWRWH4N (WRWH4N)		
	1 OP/TECH 1" ENVY STRAP (BLACK)/REG	OPESB (3801332)		
	1 MAGNUS 3 SECTION POCKET TRIPOD/REG	MATP30B (TP30B)		

Continued on Next Page ...

Customer Copy — Page 1 of 3

Project Application
Community Preservation Committee
Bridgewater, MA

Government, Education, and Corporate Department
For Pricing Requests, Purchase Orders, and Customer Service:

Phone: 800-947-8003 / 212-239-7503
Fax: 800-858-5517 / 212-239-7759
Email: [illegible]@bhphoto.com / [illegible]@bhphoto.com
[illegible]@bhphoto.com / [illegible]@bhphoto.com

B&H PHOTO - VIDEO - PRO AUDIO
The Professional's Source
420 Ninth Avenue, New York City, NY 10001 • www.bhphotovideo.com

Federal ID# 13-3926371

Quote No.: 1078918646

Date	Customer Code	Terms	Salesperson	Ship Via
	B2132030	N/A	Slsm	FDX GROUND

Qty Ord	Item Description	SKU# MFR#	Item Price	Amount
1	RODE WIRELESS GO II COMPACT MIC SYSTEM/KIT/REG	ROWGIIK ()	457.00	457.00
	CONSISTS OF:			
	1 RODE WIRELESS GO II COMPACT MIC SYSTEM/REG	ROWGII (WIGOII)		
	2 RODE LAVALIER GO PRO-GRADE WEARABLE MIC-BLK/REG	ROLAVGO (LAVGO)		
1	HOSA PRO STEREO BREAKOUT REAN 3.5mm 3'/REG	HOHMX003Y (HMXI003Y)	13.76	13.76
1	RODE VIDEOMIC-GO LIGHT WEIGHT ON CAMERA MIC/REG	ROVMG (VIDEOMICGO)	66.75	66.75
20	SANDISK ULTRA FLAIR USB 3.0 FLASH DRIVE-128GB/REG	SAUFU3FD128G (SDCZ73128G46)	15.21	304.20
	Price After $ 9.70 Instant Savings Exp. 01/29/22			
	This item currently has a price of $15.29 while supplies last.			
2	SEAGATE 10TB EXPANSION (ADD-ON) DESKTOP HD/REG	SESTEB100004 (STEB10000400)	218.89	437.78
	Price After $60.00 Instant Savings Exp. 02/08/22			
	This item currently has a price of $219.99 while supplies last.			
1	SANDISK EXTREME PRO SDXC 512GB CARD/170MBS/V30/REG	SAEPSD512GB (SDSDXXY512GA)	109.44	109.44
	Price After $90.00 Instant Savings Exp. 01/29/22			
	This item currently has a price of $109.99 while supplies last.			

Continued on Next Page ...

Customer Copy

Page 2 of 3

Project Application
Community Preservation Committee
Bridgewater, MA

Government, Education, and Corporate Department
For Pricing Requests, Purchase Orders, and Customer Service:

Phone: 800-947-8003 212-239-7503 | Fax: 800-858-5517 212-239-7759 | Email: [illegible]

PHOTO - VIDEO - PRO AUDIO

The Professional's Source

420 Ninth Avenue, New York City, NY 10001 • www.bhphotovideo.com

Quote No.: 1078918646

Date	Customer Code	Terms	Salesperson	Ship Via
	B2132030	N/A	Slsm	FDX GROUND

Qty Ord	Item Description	SKU# MFR#	Item Price	Amount
1	ENERGIZER MAX AA ALKLINE BATTERIES-12PK/REG	ENMAAAB12 (E91BP412PK)	7.49	7.49

```
PLEASE NOTE: ------------------------------------------------------------
   ****  Please reference your quote number on all PO's ****
   **** ALL PRICES ARE LISTED IN USD ****
   Certain items may be enforced by vendor to sell at the
   vendor-imposed price posted at the time of order.
```

Payment Type -	- Amount
N/A	

Sub-Total:	1,898.36
Shipping:	Free STND
Total:	1,898.36

Customer Copy

Page 3 of 3

Return to Table of Contents

4.21 Quote from B&H Foto & Electronics Corp.

For computer to run interactive elements in gallery space.

Government, Education, and Corporate Department
For Pricing Requests, Purchase Orders, and Customer Service:

Phone: 800-947-8003 212-239-7503 | Fax: 800-858-5517 212-239-7759 | Email: [illegible]

The Professional's Source — 420 Ninth Avenue, New York City, NY 10001 • www.bhphotovideo.com

Prices Are Valid Until: 03/31/22 **Quote No.:** 1080433443
Reference No.: R201202-OMNIA

Sold To: **Rose Mamakos**
Bridgewater Public Library
15 South Street
Attn: Accounts Payable
BRIDGEWATER, MA 02324

Bill Phone: (508)697-3331
Work Phone: (508)697-3331

Date	Customer Code	Terms	Salesperson	Ship Via
03/01/22	B2152030	N/A	WB	FDX GROUND

Qty Ord	Item Description	SKU# MFR#	Item Price	Amount
1	DELL OP3080-I5-10500T/6C/8/256GB/MCR PC/BLK/REG	DE3080DXVT4 (DXVT4)	687.60	687.60

PLEASE NOTE: ----------
****
We will be Closing Wednesday March 16th at 4:30pm
We will remain closed through Thursday March 17th
We will reopen on Friday March 18th at 9am
****
**** Please reference your quote number on all PO's ****
**** ALL PRICES ARE LISTED IN USD ****
Certain items may be enforced by vendor to sell at the
vendor-imposed price posted at the time of order.

Payment Type -	- Amount
N/A	

Sub-Total:	687.60
Shipping:	Free STND
Total:	687.60

[Return to Table of Contents]

4.22 Quote from VananServices.com

12/17/21, 3:20 PM SAILS, Inc. Mail - Your captioning price estimate from Vanan Services - VS00412293

SAIL NETWC

Allyson Sekerka <asekerka@sailsinc.org>

Your captioning price estimate from Vanan Services - VS00412293
1 message

Vanan Services <support@vananservices.com>
Reply-To: CRM <support@vananservices.com>
To: asekerka@sailsinc.org

Fri, Dec 17, 2021 at 2:48 PM

VANAN

Hi,

As per the chat conversation, please find the quote below for transcription and captioning. Please check the quote and let me know if you have any questions regarding the same. We can also perform a 5 minutes free sample for you to check the quality of our service.

Price Estimate

File name	Source language	Target language	Service	File Type	Total Pages/Words/Min	Cost per Page/Word/Min	Total
Filename1	English	English	Captioning	Video	300 Min(s)	$4.73 / Min [redacted]	$ 1419.00
						Base Price	$ 1419.00
						Sub Total	$ 1,419.00
						Transaction Fee	$ 70.95
						Order Total	$ 1489.95 USD

Review And Pay

Your files will be delivered to you via email within 12 Business Days (Standard delivery) from the time of payment.
* Delivery time may vary if the quality of the file is difficult.
* If your file contains technical, medical or scientific content your invoice may be altered accordingly.
Talk to an Account Manager to learn about our premium features

Need Help? Chat or Call 24/7
We would love to hear from you

Track your order

Transcription | Translation | Captioning | Subtitling | Voice Over | Video Services | Writing | Typing | Dictation | Proof Reading

App Translation | Software Solutions | Customized APIs | Website Translation | Localization | CRM Solutions | Virtual Assistants

Medical Billing & Coding | Excel Services | Data research | Conversion Rate Optimization | Web designing | Website Solutions

Toll-Free : US : +1-866-221-8843 UK : +44-80-8239-0078 AUS : +61-1-8003-87380

Terms and conditions

[Return to Table of Contents]

Project Application

Community Preservation Committee

Bridgewater, MA

4.23 Quote from Demco

Demco®
imagine what's possible™

P.O. BOX 7488
Madison, WI 53707-7488
PH 800-356-1200 FAX 800-245-1329

QUOTATION

Reference: X2032002
Contract/aid ID: C73080
Today: 2/03/22
Quote Expiration Date: 3/03/22

NAME: Bridgewater Public Library
CONTACT: ALLYSON SEKERKE
PHONE:
EMAIL: asekerke@sailsinc.org

Line	Qty	Product	Product Description	Colors/Finished/Options	Unit Price	Discount	Ext Total
1	1	W13811220	Lesro Willow 3-Seat Bench	18-1/2"H X 72"W X 24"D Vinyl Color Dillon Black Leg Color Silver	734.99	7%	683.55

PLEASE NOTE: This item may not be returned unless damaged or defective.

Order Subtotal	683.55
*Shipping/Processing	229.68
Sales Tax	Exempt
Grand Total	913.23

*Delivery Provisions: This quote has been specifically prepared to deliver with:
Tailgate Delivery : 109.68
Call Ahead - Delivery App: 0.00
Inside Delivery : 45.00
Power Lift Gate : 75.00

Additional Note: Pricing is based off the MMRC contract MC14-L50

Order Provisions: Please note the attached freight terms.

Return to Table of Contents

4.24 Estimate from Electrician

Note: current quote does not include adjustment to electrical outlets suggested by Audio Visual Intelligence, but budgeted contingency will cover this expense.

Chrisco Electric
13 Joanna Rd
Avon, MA 02322 US
cbodensieck@gmail.com

Chrisco Electrical
Ma. License#12824

Estimate

ADDRESS
Bridgewater Public Library
15 South Street
Bridgewater,Ma. 02324

ESTIMATE # 1007
DATE 02/17/2022
EXPIRATION DATE 05/01/2022

DATE	ACTIVITY	DESCRIPTION	QTY	RATE	AMOUNT
	lights	recessed 3 inch lights with gimble swivel	8	40.00	320.00
	14/2 armored cable	armored cable (bx)	100	0.00	0.00
	switches	switches	3	5.00	15.00
	switch boxes	2 gang switch	2	7.00	14.00
	Labor		8	85.00	680.00

Install new lighting in the library basement. Add switches for old lighting and new lighting.
Please forward this estimate to Allyson Sekerke as I do nor have her email.

TOTAL **$1,029.00**

Accepted By

Accepted Date

[Return to Table of Contents]

4.25 Estimate from Audio Visual Intelligence

Audio Video Intelligence, Inc.
519 Foundry Street
Easton, MA 02356
508-238-1930
www.av-intel.com

AUDIO VIDEO INTELLIGENCE

Quote

Date	Quote #
3/7/2022	15693

Contact Info:

asekerke@saitsinc.org

Bridgewater Public Library
15 South St
Bridgewater, Ma 02324

Salesperson
TCT

Item	Qty	Description	Unit Price	Total
		INTERACTIVE GALLERY TOUCHSCREEN		
		LOWER END IR TOUCHSCREEN:		
MISC - MTLS	1	ELO Touch 5553L 55" Class 4k UHD TouchPro IR Touchscreen Digital Signage - E628244	3,281.00	3,281.00T
AVI-SM-CB-ART...	1	Strong® Carbon Series Large Dual Arm Articulating Mount | 40"-80" Televisions	449.99	449.99T
AVI-WB-250-IP...	1	WattBox® 250-Series Wi-Fi Surge Protector | 2 Individually Controlled Outlets (Wi-Fi or Wired)	229.99	229.99T
AVI-WB-PWR-36...	1	WattBox™ 360 Rotating Male Power Cord - 90 Degree Angle - 3 Prong IEC Socket 1.5 Foot (Black)	19.95	19.95T
AVI-B6-4K-7.5	1	Binary™ B6 Series 4K Ultra HD Premium Certified High Speed HDMI® Cable with GripTek™ - 25 ft. (7.5M)	104.99	104.99T
AVI-B-USB2-EX...	1	Binary™ USB 2.0 A-A (Male-Female) Extender Cable 10 Meter (32.8 ft)	54.95	54.95T
AVI-LV1-1	2	AVI Single Gang Low Voltage Retrofit Mounting Bracket	3.00	6.00T
AVI-HOOD-SINGL..	2	AVI Reversible Single Gang Entrance Plate-White	4.99	9.98T
HT-LABOR	1	LABOR TO INSTALL AND CALIBRATE HDTV ON ARTICULATING WALL MOUNT—RUN HDMI AND USB FROM IT CLOSET TO HDTV	1,350.00	1,350.00
NOTE		CLIENT WILL USE SUPPLIED PC FOR HDTV CONTENT		
NOTE		POWER OUTLET AND EQUIPMENT SHELVING IN I.T. CLOSET BEHIND HDTV REQUIRED AND SUPPLIED BY OTHERS UNLESS REQUESTED		

It's been a pleasure working with you!

No cash refunds. Merchandise credit only within 5 business days. The work described on this invoice has been performed to my satisfaction. All claims and returned goods must be accompanied by this invoice. A finance charge of 1.5% per month and an annual % rate of 18% will be charged to accounts 30 days past due. The purchaser agrees to pay all costs of collection including reasonable attorney fees. The finance charges provided herein are not regulated by law. They are a matter for agreement between the parties. All merchandise returned is subject to a minimum 10% handling charge.

Sales Tax (0.0%)	$0.00
Total	$5,506.85

Signature _____

[Return to Table of Contents]

4.26 Estimate from Moving Company

MacDonald Moving Services, Inc.
The quality shows in every move we make.
Agent for United

Bridgewater Library

Bridgewater, MA 02324

Allyson Sekerke

Have 3 crates delivered into warehouse and uncrate them with 2 men.

Once uncrated they will be pad wrapped and loaded onto a truck and the driver and 3 additional men will transport the cases into the library.

Total estimate $1485.00

Based on 2 men @ $45.00 per hour to uncrate @ 4 hours

Driver and truck will be $90.00 an hour with a 4 hour minimum and 3 men @ $45.00 per hour with a 4 hour minimum.

Warehouse handling in and out $0.00 (customer courtesy)

Please sign to approve all charges and dates_____

Pauline Bolieiro

MacDonald Moving Services

pbolieiro@macdonaldmoving.com

800-225-0394 x234

Return to Table of Contents

Bridgewater Town Council

In Town Council, Tuesday, June 7, 2022

Council Order: O-FY22-074

Introduced By:	Town Manager
Date Introduced	June 7, 2022
First Reading:	June 7, 2022
Second Reading/Hearing:	
Amendments Adopted:	
Third Reading:	
Date Adopted:	
Date Effective:	

Order O-FY22-074

TRANSFER ORDER CPA STILES & HART PARKLAND IMPROVEMENT PROJECT

ORDERED; that the Town Council assembled vote to:

In accordance with section 6-4 of the Bridgewater Home Rule Charter, vote to appropriate $200,000.00 from CPA Reserves for Open Space (Account#2100-324100) and $1,100,000 from Undesignated Fund Balance for a total of $1,300,000.00 for this project.

Explanation:

See CPC recommendations of funding of $200,000 from the CPA Open Space Reserve Account #324100 (current balance of $229,627) and $1,100,000 from CPA Undesignated Fund Balance for the Stiles & Hart Parkland Improvement Project. There is a grant application in process from the LWCF (Land & Water Conservation Fund) pending in the amount of $538,050 that if successful, will be returned to the CPA Fund to offset the cost of the project.

Committee Referrals and Dispositions:

Referral(s)	Disposition(s)
•	•

NOT FOR ACTION – FIRST READING ONLY

Project Application
Community Preservation Committee
Bridgewater, MA

Cover Sheet

An electronic copy of this application and all supporting materials should be submitted to the CPC Chair at *cpc@bridgewaterma.org* and the CPC's administrative assistant (McGraw, Joshua <JMCGRAW@bridgewaterma.org>). Applications should be submitted **no later than 4:00PM at least two weeks prior to the CPC's meeting (the CPC meets on the fourth Wednesday of each month)**.

Complete applications received by this date will be reviewed at the next CPC meeting and considered for recommendation to the Town Council. Applications received after this will be reviewed at the following month's meeting, unless you receive an exception from the CPC chair for cases related to real estate purchase opportunities.[1] Projects may have timelines extending to a maximum of five years.

Projects will be favored by the CPC where:

- The project addresses at least one goal of the current CPC 5-yr. plan *https://www.bridgewaterma.org/DocumentCenter/View/2928/Community-Preservation-Committee-Plan?bidId=*
- the applicant has site control of the proposed project parcel or involvement of the site owner.
- there is demonstrated community support for the project from elected officials, abutters, user groups, civic associations, and community organizations.
- applicants can demonstrate their capacity to implement their project and have a plan for ongoing maintenance and stewardship. projects occur on public space or private space with public access.

- Applicant Signature:_____ Date Submitted: April 26, 2022

[1] For cases related to real estate purchase opportunities, the CPC may consider emergency requests for funding outside of their regular meeting schedule. If you think you might be eligible for emergency consideration, please contact the CPC Chair. The CPC Chair has the authority to accept exceptions or extensions. They will consider such requests on a case-by-case basis and is under no obligation to grant any requested extensions or exceptions.

Project Application
Community Preservation Committee
Bridgewater, MA

Complete Application Check List

Please submit the application in this order:

- ☐ Project Application Cover Page (signed)
- ☐ Project Narrative and Timeline
- ☐ Budget Narrative and cost breakdown
- ☐ Required Project Attachments including:
  - ☐ Documentation of who has site control on the property (if other than the applicant)
  - ☐ Photographs of project site (at least three (3))
  - ☐ Map of project site showing nearest major roads or intersections
  - ☐ Letters of support from relevant Town departments, officials, and boards/commissions
  - ☐ Letters of commitment (from any organizations or individuals providing funding to the project)
- ☐ Other attachments as applicable and available to your project.

Note: Applicants may be required to submit additional supporting materials and documentation, as requested by the CPC, to aid the committee in their decision-making process.

Project Application
Community Preservation Committee
Bridgewater, MA

GENERAL INFORMATION

Project Name: Stiles and Hart Parkland Improvement Project

Project Location (address and neighborhood): 0 Broad Street; Map 11, Parcel 117 and Map 12, Parcel 44

Legal Property Owner of Record: Town of Bridgewater

CPA Program Area *(check all that apply):*

X Open Space ▪ Historic Preservation ▪ Community Housing X Recreation

PROJECT DESCRIPTION

Short Project Description: The Stiles and Hart Parkland Improvement Project consists of five major components: 1) improved and added parking, 2) a new trail layout utilizing existing and new trails, 3) multiple footbridges as needed, 4) canoe launch improvement, 5) new trailhead locations and interpretive signage to educate park users of environmental and historic areas of interest located within Stiles and Hart. The proposed project budget submitted with the LWCF grant application is attached. The additional funds would support improvements to the Town River Landing area which are not contemplated by the current grant application but would be included in a FY2023 or FY2024 PARC or LWCF grant application. The LWCF grant is a 50% match grant, meaning that the entirety of the project cost must be appropriated, but the grant will reimburse up to 50% of the eligible project costs. The Town applied for LWCF funding based on an estimated cost of $1,076,010. As referenced, the difference between the Amount Requested and the estimated cost are funds to improve the Town River Landing for future incorporation into the Parkland.

Estimated Start Date: 07 / 15 / 22 **Estimated Completion Date:** 12 / 31 / 23 .

Amount Requested: $ 1,300,000 **Total Project Cost:** $ 1,300,000

PROJECT CONTACT

Contact Person: Michael Dutton .

Telephone: 508-697-0919 **Email:** TownManager@bridgewaterma.org

Project Sponsor/Organization *(check one below)***:**

X Town Committee or Department ▪ Public Charity/Non-Profit ▪ Private

Have you or this organization applied for or received CPA funding before? X Yes ▪ No

If yes, what project and when? Multiple projects, including Town House, Memorial Building, Academy Building, Athletic field improvements/construction, etc.

Project Application
Community Preservation Committee
Bridgewater, MA

ASSURANCE

I Michael Dutton hereby certify under the penalties of perjury the
(Print the name of the fiduciary agent)
following application information is true and correct to the best of my knowledge and I am legally able to enter into a contract on behalf of the Town of Bridgewater with the Town of Bridgewater for Community Preservation Funds.

Signature _____ **Date** April, 26, 2022

Title: Town Manager

Project Application
Community Preservation Committee
Bridgewater, MA

Project Narrative

Use as much space as needed and refer to the CPC's Project Application Guidance for requirements

1. **PROJECT DESCRIPTION, TASKS, & ANTICIPATED OUTCOME:** The Stiles and Hart Parkland Improvement Project consists of five major components: 1) improved and added parking, 2) a new trail layout utilizing existing and new trails, 3) multiple footbridges as needed, 4) canoe launch improvement, 5) new trailhead locations and interpretive signage to educate park users of environmental and historic areas of interest located within Stiles and Hart. The proposed project budget submitted with the LWCF grant application is attached and shows the tasks contemplated. The additional funds would support improvements to the Town River Landing area which are not contemplated by the current grant application but would be included in a FY2023 or FY2024 PARC grant application. The LWCF grant is a 50% match grant, meaning that the entirety of the project cost must be appropriated, but the grant will reimburse up to 50% of the eligible project costs. Once complete, the Stiles and Hart Parkland should be an easily accessible public park with convenient parking, handicapped access to trails and fishing, and miles of passive recreational opportunities. It is a key part of the community and economic development plan for the downtown area. Also considered part of the project are improvements to Town River Landing, including cleanup, parking, subdivision into separate lots for transfer for park purposes, signage, and future bridge planning.

2. **CPC GOALS AND PRIORITIES:** From the Community Preservation Plan FY2020-FY2024, Open Space and Passive Recreation:

   GOAL 2: Preserve existing natural open space and passive recreation facilities—specifically enhancing safety and public access. The CPC encourages project proposals to rehabilitate aging or create new recreation facilities to make them accessible to persons of all abilities, including those with special needs, such as additional lighting, fencing, ramps, and other design features.
   GOAL 3: Preserve and acquire strategic private open space properties along water resources and river corridors to improve water quality and to protect priority wildlife habitats and critical natural landscapes from development.
   GOAL 4: Create, preserve, and acquire neighborhood-level open spaces for pocket parks, community gardens, and other outdoor gathering spaces.

Project Application
Community Preservation Committee
Bridgewater, MA

3. **COMMUNITY NEEDS:** The Town has embarked on a project to improve the Stiles and Hart Parkland to provide better passive recreational opportunities to all residents, but particularly to residents in the downtown area who may not have adequate access to open space and forested lands. This project will develop parking at Stiles and Hart, provide accessible trail networks, and accessible fishing areas among other improvements.

4. **COMMUNITY SUPPORT:** List of Letters of Support

Name *(committee, department, official, organization, etc.)*	**Date Requested**	**Date Submitted**
Bridgewater State University to Div. of Conservation Services		Jan. 24, 2022
State Rep. Angelo D'Emilia to Div. of Conservation Services		Jan. 18, 2022
NRTB to Div. of Conservation Services		Jan. 20, 2022
Bridgewater Open Space Committee to Div. of Conservation Services		Jan. 21, 2022
Monica Bentley		Jan. 24, 2022
Edgewood Development Company		Jan. 19, 2022

5. **IMPLEMENTATION AND TIMELINE:** The Town has applied for funding through the Land and Water Conservation Fund, a federal grant program vetted through the Massachusetts Executive Office of Environmental and Energy Affairs. The federal announcement is not anticipated prior to June, 2022. Once awarded, the Town will finalize construction drawings, go through the appropriate procurement process and then begin the construction process. It is anticipated that work will not be completed until mid to late-2023.

6. **ORGANIZATIONAL EXPERIENCE AND CAPACITY:** The Town is an institutional applicant for Community Preservation Funds with extensive familiarity with municipal process, funding, procurement, and grant funding.

7. **MAINTENANCE:** This project will result in a Parkland that requires regular and

consistent upkeep. The Town has just hired a Parks Steward. The position will assist the Parks and Recreation Department, specifically oriented to Parklands. Regular trash pickup, brush cutting, trail maintenance, hardscape upkeep, and cleanup will be the responsibility of the Parks Steward and a group of trained volunteers.

8. **MULTI-YEAR PROJECTS:** The upgrades to Stiles and Hart are intended to be complete in 2023, however the Town will be looking for additional grant funding to complete the design and construction of a pedestrian bridge across the Town River at the Town's Town River Landing off of Spring Street. This will be a separate project. Incorporated into this application are improvements to portions of Town River Landing, including the cost of placing portions of the property into a parks restriction, and initial expenses related to the engineering for the bridge project.

9. See Attachments Checklist for additional required materials, if applicable and available.

APPLICANT SIGNATURE: _____

DATE SUBMITTED: April 25, 2022

Project Application
Community Preservation Committee
Bridgewater, MA

Project Application Attachments (see Application Guidance)

1. **SITE CONTROL:** The Town already owns the property upon which any work is contemplated.
2. **COMMUNITY SUPPORT:** Through many public meetings, the public has voiced support for the improvements ot Stiles and Hart as evidenced by the application for LWCF funding (attached).
3. **VISUAL MATERIALS:** Maps and photographs are attached to this application.
4. **MAPS:** Maps and photographs are attached to this application.
5. **FUNDING SUPPORT REQUIREMENTS**
   a. Historic Preservation Proposals
   b. Open Space Proposals
   c. Recreation Proposals
   d. Community Housing Proposals
   e. Proposals Involving Real Property
   f. Proposals Involving Design and Construction

Check out the CPC's webpage for more information:
https://www.bridgewaterma.org/1353/Community-Preservation-Committee

If you have questions, please contact the Community Preservation Committee Chair at *cpc@bridgewaterma.org* and Community and Economic Development Department (CED) Director DeBoisbriand, Jennifer at *JBURKE@bridgewaterma.org* or call at 508-697-0950**.**

Project Application
Community Preservation Committee
Bridgewater, MA

Project Budget Narrative

PROJECT COST:

Project Budget Overview

Total Project Cost	CPA Amount Requested	Other Funding Sources	CPA Funds: % of Total
$1,300,000	$1,300,000	$538,005 possible	100%

LEVERAGING FUNDING:

Sources of Funding Overview

Source *(private, federal, state, or local government)*	Amount	Status *(received, pending, will apply)*
Possible LWCF Grant through EOEEA/National Parks	$538,050	Pending - 6/2022 notification
	$	
	$	
	$	
	$	

ANTICIPATED PROJECT EXPENSES: The professional cost estimate is attached.

PROJECT COST ASSUMPTIONS: The cost assumptions are based upon the cost estimate completed by Armory Engineers which is well versed in park renovations and upgrades throughout the state. Additional funding is requested to make improvements to the Town River Landing and place portions of the property into c. 97 restriction.

ACQUISITION OF AN INTEREST IN REAL ESTATE: N/A

BONDING AGAINST CPA FUNDS: Bonding is possible depending upon the extent of the LWCF grant funding. Once the LWCF grant is announced, we will forward possible boning scenarios to the Community Preservation Committee, the Finance Committee, and the Town Council for review.

Project Application
Community Preservation Committee
Bridgewater, MA

Project Budget Attachment

BUDGET OVERVIEW

Total Project Cost	CPA Amount Requested	Other Funding Sources	CPA Funds: % of Total
$ 1,300,000	$ 1,300,000	$ 538,005 possible	100 %

INCOME – OTHER SOURCES OF PROJECT FUNDING

Source *(private, federal, state, or local government)*	Amount	Status *(received, pending, will apply)*
Possible LWCF Grant through EOEEA/National Parks	$ 538,005	Pending - 6/2022 notification
	$	
	$	
	$	
	$	

SUMMARY OF PROJECT EXPENSES[2]

	CPA Funds	Other Funding	Total
Personnel	$	$	$
Equipment	$	$	$
Supplies	$	$	$
Design and Contracts	$ 100,000	$	$ 100,000
Construction	$ 1,200,000	$ 538,005 possible	$ 1,200,000
Other	$	$	$
TOTAL	$	$	$

[2] Equipment is generally defined as an item with a useful life expectancy of more than one year. Supplies are defined as an item with a useful life of less than one year. Construction means all types of work done on a particular property or building including erecting, altering or remodeling.

Project Application
Community Preservation Committee
Bridgewater, MA

DETAILED PROJECT EXPENSES

Personnel

	CPA Funds	Other Funding	Total
Ex: Project Manager			
Ex. Inspectional Services	$	$	$
	$	$	$
	$	$	$
TOTAL	$	$	$

Equipment[3]

	CPA Funds	Other Funding	Total
Ex: Furniture			
	$	$	$
	$	$	$
	$	$	$
	$	$	$
TOTAL	$	$	$

Supplies[4]

	CPA Funds	Other Funding	Total
Ex:	*$*	*$*	*$*
	$	$	$
	$	$	$
	$	$	$
TOTAL	$	$	$

Design and Contracts

	CPA Funds	Other Funding	Total
Ex: Deed Restriction			
Ex: Appraisal			
Engineering	$ 100,000	$	$ 100,000
	$	$	$
TOTAL	$ 100,000	$	$ 100,000

[3] Equipment is generally defined as an item with a useful life expectancy of more than one year.
[4] Supplies are defined as an item with a useful life of less than one year.

Project Application
Community Preservation Committee
Bridgewater, MA

Building and Construction[5]

	CPA Funds	Other Funding	Total
Ex: Picnic Pavilion			
Construction as shown on plan, attached and improvements to Town River Landing.	**$** 1,200,000	**$**	**$** 1,200,000
	$	**$**	**$**
TOTAL	**$**	**$**	**$**

Other

	CPA Funds	Other Funding	Total
Ex: Land Acquisition			
	$	**$**	**$**
	$	**$**	**$**
	$	**$**	**$**
TOTAL	**$**	**$**	**$**

Task based task (scope) costs identifying funding source

	CPA Funds	Other Funding	Total
Ex: Accessible Entrance			
Ex: Accessible Elevator			
	$	$	$
	$	**$**	**$**
	$	**$**	**$**
TOTAL	**$**	**$**	**$**

Attach Letters of support and other key documents.

See LWCF grant application for letters of support.

[5] Construction means all types of work done on a particular property or building including erecting, altering or remodeling.

A RESOLUTION TO APPLY FOR, ACCEPT, AND EXPEND A GRANT FROM THE FEDERAL LAND AND WATER CONSERVATION FUND AS ADMINISTERED BY THE COMMONWEALTH OF MASSACHUSETTS EXECUTIVE OFFICE OF ENERGY AND ENVIRONMENTAL AFFAIRS, DIVISION OF CONSERVATION SERVICES

WHEREAS: The Commonwealth of Massachusetts Executive Office of Energy and Environmental Affairs (EEA) Division of Conservation Services (DCS) is making Federal funding available through the Land and Water Conservation Fund (LWCF) State Assistance Program;

WHEREAS: The LWCF Program was established by PL 88-578 in 1965 to assist in preserving, developing, and assuring accessibility to all citizens of the United States of present and future generations, and visitors who are lawfully present within the boundaries of the United States, such quality and quantity of outdoor recreation resources as may be available and are necessary and desirable for individual active participation in such recreation; and to strengthen the health and vitality of U.S. citizens;

WHEREAS: The goals of the Town are to:

> Meet State and locally identified public outdoor recreation resource needs to strengthen the health and vitality of the American people; and increase the number of protected State and local outdoor recreation resources and to ensure their availability for public use in perpetuity, and encourage sound planning and long-term partnerships to expand the quantity and to ensure the quality of needed State and local outdoor recreation resources.

WHEREAS: The CITY will vote to appropriate, and/or borrowing according to M.G.L. Chapter 44, Section 7(1), the sum of $1,300,000, for the purpose of paying costs associated with improvements to Stiles and Hart Parkland, known as the Stiles and Hart Parkland Improvement Project, located at 0 Broad Street, and for the payment of all costs incidental and related thereto (the "Project").

WHEREAS: The City known as the Town of Bridgewater has identified an assembly of parcels of 75 acres known as Stiles and Hart Parkland under the control of the Bridgewater Conservation Commission pursuant to MGL Chapter 40, Section 8c that would be preserved for quality outdoor passive recreation purposes.

WHEREAS: The City known as the Town of Bridgewater intends to submit an application to EEA to fund up to fifty percent of the development cost of the improvements to Stiles and Hart Parkland.

NOW THEREFORE, BE IT RESOLVED:

That the City Manager be and is hereby authorized and requested to file an application with The Commonwealth of Massachusetts Executive Office of Energy and Environmental Affairs Division of Conservation Services for a Land and Water Conservation Fund State Assistance Program grant, and;

Further, subject to receipt of such Land and Water Conservation Fund State Assistance Program grant, that the City Council does hereby appropriate $1,300,000 for the purpose of paying costs associated with improvements to Stiles and Hart Parkland, located at 0 Broad Street and for the payment of all costs incidental and related thereto, and that to meet this appropriation, up to $1,300,000 (One million three hundred thousand dollars) is hereby appropriated from available amounts in the Community Preservation Fund Reserve Balance and the Open Space Reserves, and the Treasurer, with the approval

of the City Manager, is authorized to borrow $1,300,000 (One million three hundred thousand dollars) under and pursuant to Chapter 44, Section 7(3) and Chapter 44B of the General Laws, or pursuant to any other enabling authority, and to issue bonds or notes of the City therefor, and any borrowing authorized by this Loan Order shall be reduced to the extent of any and all grants received by the City on account of the Project, and;

That the City Manager be and is hereby authorized to accept grant funds and execute contracts, and any amendment thereto, in order to carry out the terms, purposes, and conditions of the Land and Water Conservation Fund State Assistance Program grant program, and;

That the City Manager be and is hereby authorized to take such other actions as are necessary to carry out the terms purposes, and conditions of the Land and Water Conservation Fund State Assistance Program.

Attachment A

FEDERAL LAND AND WATER CONSERVATION FUND
FY22 APPLICATION FORM

Instructions:

- *The application must be submitted through this online form. The Applicant will be asked to enter all of the information in the table below directly into the form.*
- *The application can be saved while working on it. Click "Save and Resume Later" at the bottom of the form and then click on "Save and Get Link." A link to the application will be provided which must be copied and saved in order to return to the application. A good way to ensure that the link is not lost is to email it to yourself.*
- *Please note that all documents which have been uploaded at the end of the application will not be saved if leaving the site before submitting the application. The files must be uploaded again upon re-entering the site and submitting the application.*
- *Total size of all documents attached to the online form cannot exceed 25 MB.*
- *Please ensure that all files you upload are consistently labeled. Please make file names consistent with the following: [Name of municipality]_[Shorthand version of project title]_[Name of attachment from attachment checklist]_LWCF*
- *Please upload files to the online form as PDFs if possible, unless otherwise specified*

1. **Municipality or state agency department name:** Town of Bridgewater

2. **Project name:** Stiles and Hart Parkland Improvement Project

Project address: 0 Broad Street

GPS coordinates at main entrance: 42.000688, -70.969915 Congressional District: 8

Project acreage: ~80

Project registry information for Development and Renovation projects only:

Street address of the Registry of Deeds where the park's deed is located

(**not the park's street address**): 66 Central Square, Bridgewater, MA 02324

Book: 62967 Page: 169

Type of Project: ☐ Acquisition ☐ Acquisition and Development

☐ New Development ☒ Renovation

If an acquisition, interest to be acquired: ☐ Fee ☐ Conservation Restriction

Has this site received previous LWCF assistance? ☐ Yes ☒ No

3. **Contact Person:** Michael Dutton

Agency: Town of Bridgewater

Address: 66 Central Square, Bridgewater, MA 02324

Zip 02324

Telephone 508-697-0919 Fax

Email: mdutton@bridgewaterma.org

Please note: Attach authorization from the Chief Executive Officer identifying the individual named above who will act as the official representative of the Applicant in

connection with this application. This is most often not the Chief Executive Officer, but the staff person that will be working on the project from day-to-day.

4. **Briefly describe the project on TWO attached pages (writing should be no smaller than single spaced, 11 point font, ¾" margins).** Use the LWCF Rating System as an outline for the description, including (but not limited to) what is listed below, to ensure the maximum score possible for your project.
   - How the project will improve community health and resilience to climate change in the project's neighborhood (e.g. reducing the heat island effect, mitigating stormwater and flooding issues, filtering pollution from local traffic and other sources, etc.; for acquisition projects include the TNC resiliency map and for park projects include the UMass I-CARES Urban Heat Island map)
   - Relevance to the Statewide Comprehensive Outdoor Recreation Plan and (for municipalities) local Open Space and Recreation Plan or (for departments) agency acquisition plan
   - How the project will increase the availability of recreational opportunities available to residents in areas of the state that currently have inadequate access to open space and encourage outdoor exercise
   - Ability for the project to provide access to people with disabilities – describe how the project goes above and beyond what is required by law
   - For projects in Environmental Justice neighborhoods, provide information on how use of new or restored greenspace will be encouraged
   - Environmental education available on site with a focus on how the project will reduce summertime heat
   - Describe stewardship activities undertaken in your community/department – provide detailed information on baselines completed, staff dedicated to stewardship activities such as maintenance, etc.
   - Ability to reach project site by alternative means of transportation, such as walking, cycling, or public transit (while LWCF cannot fund walking access to parks, partnerships that encourage walking or cycling access are encouraged)
   - Creation of new trails or expansion or connection of existing trail(s)
   - Water-based recreation (include linear footage of water resource and what types of recreation will be provided, including wildlife viewing)

5. **Proposed Funding:**

The LWCF program is a ***reimbursement*** program. Grant recipients are reimbursed after invoices have been paid. **The total project cost must be raised or appropriated by the municipality or department shortly after project approval if it has not already been appropriated.** Costs incurred prior to grant approval and contract execution are not eligible for reimbursement, **including appraisal and/or design costs**. Force account labor is also ineligible, as are donations and volunteer hours. Mention any *previous, pending, or anticipated* financial assistance on this project. Refer to the LWCF Manual Chapter 5 for eligible cost details. A sample budget can be found in Attachment E. Please note that LWCF grants have a maximum 50% reimbursement rate with a maximum $1,000,000 and minimum $50,000 grant request. The specific reimbursement rate for the project subject to this application will be based on what percentage the grant award is of the total eligible project cost. For acquisition projects without an appraisal at the time of the grant deadline, use best estimates here. Final details will be worked out when appraisal is submitted.

Total Eligible Project Cost: $896,675.00

LWCF Request: $448,337.50

(up to 50% of total project cost, maximum of $1,000,000 for projects receiving the maximum climate resilience score or $750,000 maximum for all other projects, minimum of $50,000)

Municipal Share: $448,337.50
(Community Development Block Grant, Community Preservation Act, etc., please specify in narrative)

Other: (i.e. private donation to community, fund raising, etc.) $0.00

Attach a one page description of the proposed project budget including:

- The source of all local funding including donations and Community Preservation Act funds.
- Description of the details of any donation, if applicable (be sure these funds are gifted to the community or department and earmarked for the project).
- Description of any other sources of funding including federal, state, municipal, or nonprofit organizations. List these partners and describe their contribution.

6. **Leases, Rights, and Restrictions**

Describe outstanding leases, restrictions or other rights or interests held by others in the project site and enclose copy of the same. See page 8-2 of the LWCF Manual for more information on what is allowable on the property under the LWCF program.

7. **Structures (for Acquisition Projects Only)**

Are there currently any buildings or structures on the property? ☐ Yes ☒ No

If yes, list each one, including the estimated value and current use, as well as its intended use if this project is funded. If this is an application for a conservation land acquisition, the grant is intended to preserve the undeveloped land, not to purchase buildings. The type of structure could impact the grant award. Acceptable structures include, but are not limited to, storage sheds, information kiosks, or barns that hold environmental education workshops.

8. **Permanent Protection (for Development or Renovation Projects Only)**

If the applicant already owns the land, is the property permanently dedicated for park, playground, or recreation purposes (MGL Chapter 45, Section 3 or 14) or conservation purposes (MGL Chapter 40, Section 8C)? If not, please submit draft dedication language for DCS review (all land within the Section 6(f)(3) boundary map must have the appropriate dedication language recorded in the deed before final reimbursement from EEA).

☒ Yes ☐ No

9. **Fees**

Are fees currently charged or proposed for this site? If yes, please attach a copy of the fee system. Charging fees is allowed subject to DCS approval. If applicant is awarded a grant, the site cannot be restricted to municipal residents only. If fees are charged based on residency, fees for nonresidents are subject to Chapter

8 of the LWCF Manual. If a site's fee structure is not compatible with EEA and NPS policy, a grant award may be rescinded.

☐ Yes (copy attached) ☒ No

10. Community Preservation Act

Has your community passed the Community Preservation Act?

☒ Yes ☐ No ☐ N/A

If "yes", please note that successful grant applicants that have purchased real property interests for open space or recreational purposes using money from the Community Preservation Fund must have all conservation restrictions required by Section 12 of Chapter 44B approved by the Secretary of Energy and Environmental Affairs and recorded prior to receipt of final project reimbursement from the Executive Office of Energy and Environmental Affairs (for file records only).

11. Municipal Open Space and Recreation Plan (for municipal applicants)

Describe how your project meets the recommendations in your current OSRP. To receive points in this category, you must cite specific goals, objectives, and/or actions from the Action Plan and the associated page number references.

	Goal, objective, or action plan item from current OSRP	Page #
1	To provide and enhance balanced recreational opportunities for active and passive recreation	2
2	To protect and preserve environmentally friendly and sensitive area's that are significant	3
3	Promote passive recreational use of the towns conservation areas by enhancing access	3
4	Design and install interpretative displays at conservation properties	3

12. Enhanced Outreach to Environmental Justice Populations

Describe how Environmental Justice Populations in your community (or neighboring communities) were able to participate in the project select and design process. Please include any flyers, mailings, etc. that were distributed to the community and list here where they were distributed.

Through public planning and Q+A sessions residents and others were able to take part in prioritizing activities and proposals that would be appropriate for conservation areas, see attachment for attendence list which includes, residents, non-residents, stewards and staff.

13. Check the following if applicable to project (for file records only):

☐ Yes ☒ No Prime agricultural lands (see Ex. Order #193)

☐ Yes ☒ No Environmental intrusion, i.e. overhead power lines (**must be buried**), safety hazards

☐ Yes ☒ No Brownfield – 21E evaluation

☐ Yes ☒ No Environmental Justice community/neighborhood (neighbors a minority populati

☐ Yes ☒ No Acquisition involving relocation of residents, tenants, or businesses

If an acquisition project:

Do you have a purchase and sales agreement or agreed price? ☐Yes ☐No

If yes, amount: $_____

Is clear title available? ☐Yes ☐No

If no, is an eminent domain taking anticipated? ☐Yes ☐No

Note that if clear title is not available, the community may decide to acquire the property by a friendly taking (eminent domain) process to clear the title. It is best to know if there is a potential title problem as soon as possible since this can complicate the acquisition process.

Appraisal Report (note that the appraisal deadline is February 28, 2022)

Valuation: $_____ Total wetland acres: _____

Appraiser: _____ Total upland acres: _____

Valuation Date: _____ Total potential house lots: _____

Please note: the appraisal must be submitted using federal appraisal standards ("Yellow Book") and you must contact Melissa Cryan no later than December 17, 2021 in order to coordinate the appraisal process.

14. Check if the following permits are required (for file records only):

☐ Yes	☒ No	U.S. Army Corps of Engineers (404 or Rivers and Waterways)
☒ Yes	☐ No	MA DEP Division of Wetlands & Waterways
☐ Yes	☒ No	U.S. Coast Guard
☐ Yes	☒ No	U.S. Dept. of Agriculture (Zoos)
☒ Yes	☐ No	C. 131 s. 40 Wetlands (municipal conservation commission)
☐ Yes	☒ No	MEPA Review (301 CMR 11.00: MEPA Regulations)

IMPORTANT NOTICE

If any of the above permits are required, the permit or application for the permit must be submitted. Should the project be selected for funding, the permit will be required as part of the final application.

15. Attach certification of applicant community's legal authority to apply for the grant and to finance and construct the proposed facilities (see Sample Municipal Vote), and the **Chief Executive Officer's legal authorization to execute contracts**. This is a resolution, motion, or similar action that has been duly adopted or passed as an official act of the community's governing body that authorizes the filing of the applications, including all understandings and assurances contained therein.

_____ _____

Date Signature of Chief Municipal Officer

Michael Dutton, Town Manager

Name and Title (Typed)

1/31/25

Duration of Term

Mailing Address:

Lola Central Square

Bridgewater, MA 02324

Telephone: 508-697-0919

ATTACHMENTS

Project Boundary Map

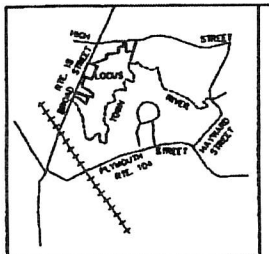

LOCUS PLAN
N.T.S.

ABUTTOR LIST

1 A&L REALTY TRUST
2 A&L REALTY TRUST
3 MING FAN REALTY NOMINEE TRUST
4 MING FAN REALTY NOMINEE TRUST
5 CHARLES ARRIGHI
6 MATTHEW & KELLY SMART
7 PETER & LEONA MAZZOLENI
8 DANIEL & RUTH WALKER
9 PETER & LEONA MAZZOLENI
10 WILFRED & PAULINE DUMAS
11 ANTONIO & ALMADA FERNANDA
12 CAMPUS REALTY TRUST
13 CAMPUS REALTY TRUST
14 TOWN OF BRIDGEWATER
15 RUSSELL & NANCY COOK
16 RUSSELL & NANCY COOK
17 JOSEPH & SHARLENE WALSH
18 EDWARD & ISABEL PHILINGER
19 YOLANDA & MERRIL FRANKLIN
20 LAWRENCE & JUDITH NASON
21 MARY WADEKSZA
22 LORRAINE LEVY
23 TOWN OF BRIDGEWATER
24 DOLORES LOPIEKES
25 JULIE WOOD
26 TOWN OF BRIDGEWATER
27 TOWN OF BRIDGEWATER
28 THOMAS FLATLEY
29 HENRY & LORETTA PISTONE
30 JEFFREY & JOANNE MANSFIELD
31 ROBERT & ELEANOR GASKELL
32 BROAD STREET REALTY TRUST
33 PETER & LEONA MAZZOLENI
34 BRICK KILN REALTY TRUST

I CERTIFY THAT THIS PLAN HAS BEEN PREPARED IN CONFORMANCE WITH THE RULES AND REGULATIONS OF THE REGISTERS OF DEEDS.

6-29-99
DATE PROFESSIONAL LAND SURVEYOR

6-7-99

JUN 30 1999
6-30-99
RECORDED

'99-455
FOR REGISTRY USE ONLY

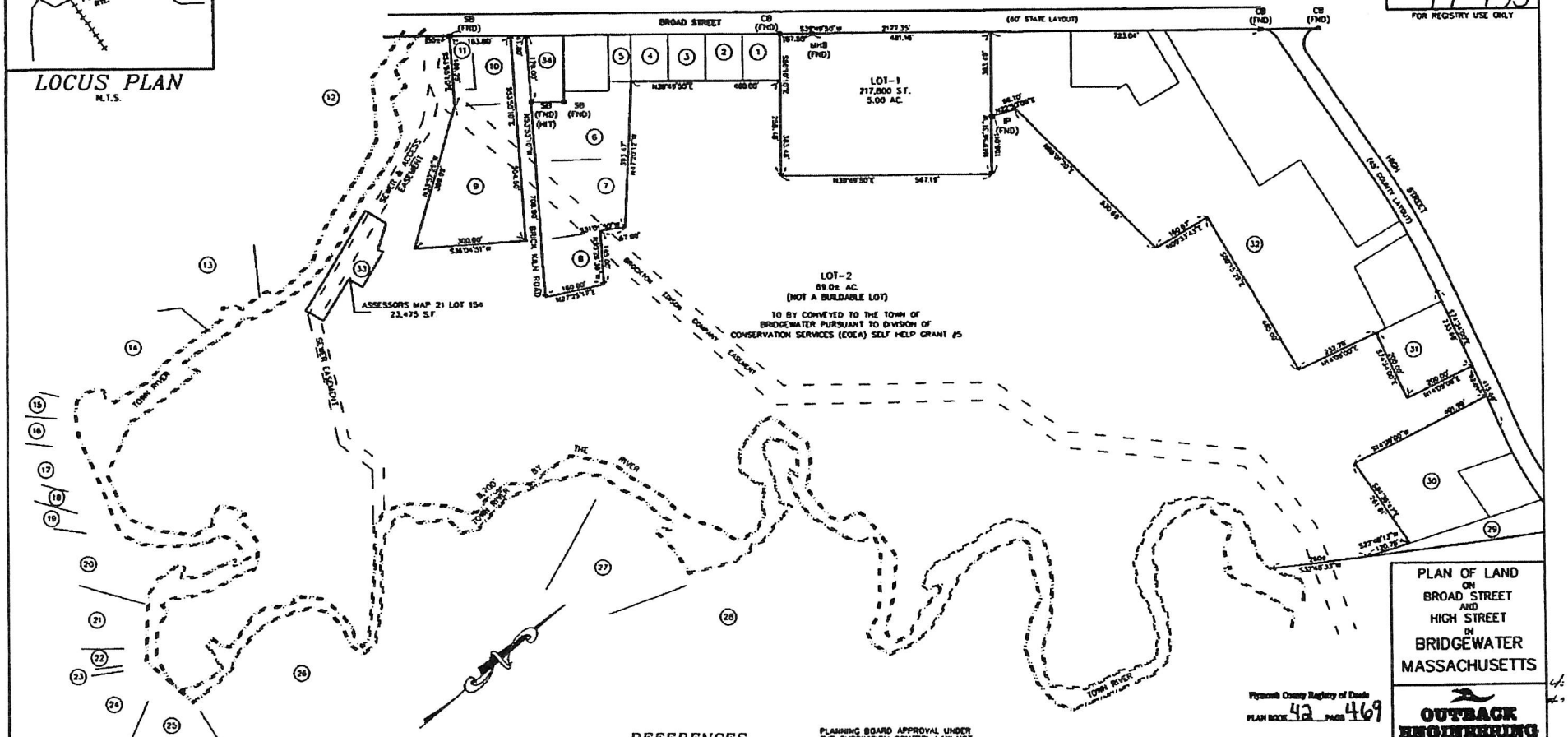

PLAN OF LAND
ON
BROAD STREET
AND
HIGH STREET
IN
BRIDGEWATER
MASSACHUSETTS

Plymouth County Registry of Deeds
PLAN BOOK 42 PAGE 469

OUTBACK ENGINEERING INC.
321 WEST GROVE STREET
MIDDLEBORO, MA 02346
TEL: (508)-946-9231

DATE: MAY 24, 1999	
SCALE: 1"=120'	PROJECT No. 389
DRAWN BY: P.B.	CHECKED BY: J.D.Y.
389PLY.DWG	SHEET 1 OF 1
0' 120' 240' 360'	

ZONING

R-C DISTRICT

AQUIFER PROTECTION DISTRICT – ZONE 2

LOT AREA	18,500 S.F.
LOT FRONTAGE	125 FEET
FRONT YARD SETBACK	35 FEET
SIDE YARD SETBACK	20 FEET
REAR YARD SETBACK	30 FEET

NOTE.
THIS PLAN WAS COMPILED FROM DEEDS, PLAN, AND OTHER SOURCES AND IS THE RESULT OF A PARTIAL FIELD SURVEY

REFERENCES

PLAN BOOK	1	PAGE	477
PLAN BOOK	1	PAGE	911
PLAN BOOK	13	PAGE	312
PLAN BOOK	19	PAGE	406
PLAN BOOK	34	PAGE	864
PLAN BOOK	36	PAGE	234

PLANNING BOARD APPROVAL UNDER THE SUBDIVISION CONTROL LAW NOT REQUIRED.

DATE: 6/7/99
Ronald J. Lavoie

BRIDGEWATER PLANNING BOARD

OWNER

STILES & HART BRICK CO
DEED BOOK 13703 PAGE 112
ASSESSORS MAP 12 LOT 44

cc: d 90345
j: 40546

'99-455

USGS Locus Map

USGS Topographic Locus Map: Stiles and Hart Conservation Area

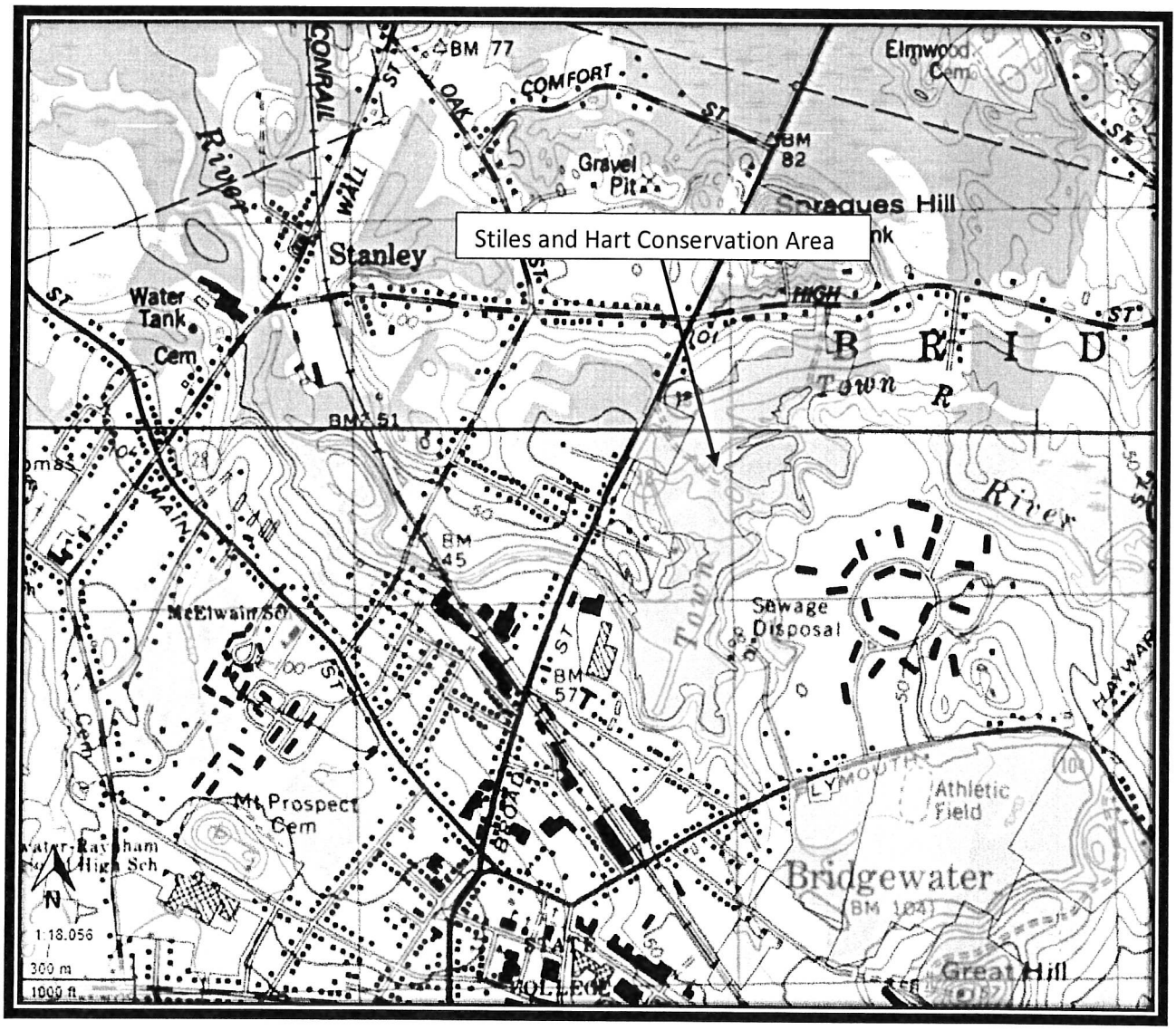

Mass Historic Mapping

Mass Historic Mapping

MassHistoric Commission Towns

- Survey Pending
- No Survey Pending

MassHistoric Commission Inventory (Areas)

- National Register of Historic Places
- Preservation Restriction
- Massachusetts Historic Landmark
- Local Historic District
- NRHP and LHD
- Inventoried Property

MassHistoric Commission Inventory (Points)

- National Register of Historic Places
- Preservation Restriction
- Massachusetts Historic Landmark
- Local Historic District
- NRHP and LHD
- Inventoried Property

NHESP Priority Habitats of Rare Species

Property Tax Parcels

Natural Heritage and Mass Historic will be sought for preliminary review in the coming weeks, due to lack of staff and the need to file for these permits during project construction and improvement, the Town of Bridgewater will file appropriately with each entity. Maps showing current points of interest or priority habitat areas have been included.

Natural Heritage Mapping

Natural Heritage Priority Habitats

NHESP Priority Habitats of Rare Species

Property Tax Parcels

Natural Heritage and Mass Historic will be sought for preliminary review in the coming weeks, due to lack of staff and the need to file for these permits during project construction and improvement, the Town of Bridgewater will file appropriately with each entity. Maps showing current points of interest or priority habitat areas have been included.

Evidence of Public Meeting on Proposed Project

BW Parks and Trails 10-17-19

Glenn Watson	508-930-0648	Lisamd1@verizon.net
Jake Haskett	508-631-2862	Troop31cc@gmail.com
Mike Diversa	508-279-1353	mdaversa@comcast.net
Betty Gilson	774-226-0942	gillyflower@verizon.net
Monica Bentley	508-331-2404	monicabentley@comcast.net
Harry Bailey	774-444-5781	
Frank Sousa	508-577-5479	
Becky Coredeiro	508-930-0346	Refco27@gmail.com
Steve Black	508-697-3966	Sjbbc50@comcast.net
Pat Neary	508-697-8791	Pneary7@aol.com
Eileen Hiney	508-279-3955	fryleen@verizon.net
Greg Goudreau	774-219-7869	gaudreaugreg@gmail.com
Stacy Bean	508-697-1917	Skean03@hotmail.com
Kevin Mandeville	805-245-2248	
Kevin Bean	508-400-3598	Kevinbean132@comcast.net
Maureen Minasian	508-245-6949	mjminasian@comcast.net
Paula & Peter Linhares	508-697-3092	Paulal3092@gmail.com
Ryan Donnelly	617-519-1322	Donnelly19508@yahoo.com
Melissa Donovan	774-993-8192	Ms.donovan93@yahoo.com
Marilee Hunt	508-562-2896	marilee@thehunts.org
Carleton Hunt	508-243-0638	carlton@thehunts.org
Fred Chase	508-904-0948	fredchase@gmail.com
Cheryl Cambria	508-942-0366	wallaceway@verizon.net
Jeff Robertson	508-697-5079	Toddy20@comcast.net
Regina McCoy	508-371-8079	reginamccoydean@yahoo.com
Gina Guasconi	508-697-6555	Gigi1024@verizon.net
Lee Neary	516-313-0730	profesoraneary@aol.com
Mary Worsham	508-284-4245	nworsham@comcast.net
Scott Lussier	617-513-7089	snulussier@gmail.com
Kit Doherty	508-297-2358	Riverland927@gmail.com

The attendance list above was compiled during an event held to plan and prioritize activities within all parks located in Bridgewater and specifically was outreached geared to increase interest in the position of Parks Steward, which is a part time position available within the Community and Economic Development.

Within the attendance list are former and current park stewards, of the 6 parks within the Bridgewater Parks inventory. The focus was on compiling more stewards and prioritizing volunteer efforts within the parklands.

Stiles and Hart has a long serving Steward, Harry Bailey, whom is also the Vice Chairman of the Bridgewater Conservation Commission and life-long Bridgewater resident.

Outreach continued in this arena including but not limited to: construction and placement of bog bridges, information sessions via zoom regarding appropriate trail maintenance and construction and consistent site visits to address issues such as vandalism, illegal dumping, illegal camping and other items that might need to be addressed.

Currently, the Community and Economic Development oversees this function, with an ongoing opening for a Park Steward to manage and organize the volunteer base present in Bridgewater.

I have shared the links for both the meeting on October 17, 2019 directly relating to initial planning amongst residents and staff it also lays out items, this meeting provides great insight from life-long and long term residents: https://www.youtube.com/watch?v=0MiXO5g_KcA

In addition, the CED Department has brought in entities like Appalachian Mountain Club to have informational zoom sessions on good stewardship and trail creation techniques. Stewardship is outlined as reporting, recording and alerting the appropriate parties so that any and all potential parkland issues are handled quickly, efficiently and effectively. The flyer for a scheduled cleanup amongst existing stewards, volunteers and any interested parties is also attached for reference.

Project Description

Stiles and Hart Parkland Improvement Project Description

The Stiles and Hart Parkland Improvement Project consists of five major components. These components are: 1) improved and added parking, 2) a new trail layout utilizing existing and new trails, 3) multiple footbridges as needed, 4) canoe launch improvement, 5) new trailhead locations and interpretive signage to educate park users of environmental and historic areas of interest located within Stiles and Hart.

This project would aim to improve community health in a variety of ways. It will help mitigate the heat island effect in an in-Town location. Almost 80 acres of Stiles and Hart is currently conservation restricted. This improvement project will allow residents, university students, and visitors the ability to learn about how a well-managed parkland can serve as a climate resilience learning opportunity and learn about the importance of floodplains that buffer the river and naturally assist in filtering both point source and non-point source discharge.

The Stiles and Hart Improvement Project will also meet some of the objectives of Bridgewater Open Space and Recreation Plan (OSRP) which was updated in 2017. This Project would address:

- Goal (1) of the OSRP highlights the need for balanced recreational activities, through creation of additional opportunities to meet emerging recreation needs, promote passive use of the town's conservation areas by enhancing public accessibility, creating and maintaining trails, establishment of wildlife viewing areas, and increasing waterfront access.

  The proposal includes the establishment of new trails and the improvement of old trails that already exist throughout the property. In addition, Stiles and Hart improvements focus on increasing the volume of passive recreation activities like hiking, horseback riding, wildlife viewing, canoeing, kayaking and fishing in the Park through the enhancement of access and trail maintenance from multiple entryways into the park. Critically, the proposal includes dedicated parking for 14 vehicles which would be the first time parking has ever been provided for residents and visitors to utilize this spectacular in-Town parkland.

  The proposed parking area will also serve as a trailhead that will provide an ADA accessible trail to wildlife viewing and fishing areas as seen on the proposed plan by Amory Engineering. ADA accessibility is a key component of the Project.

- Goal (3) of the Town's OSRP calls for consistent signage and the design and placement of interpretive displays at conservation properties in collaboration with private, non-profit, and state government stakeholders.

  Signage and interpretive kiosks are proposed to provide insight into the history and environmental importance of the Parkland to the community of Bridgewater. Stiles and Hart Parkland (named after the brick company which owned the property prior to the Town and was the successor owner to the brick manufacturer which operated on the site for almost 50 years) has a rich history, including being the site of the Plymouth County Agricultural Society fairground from 1819 to 1900. Interpretive kiosks are planned to highlight the history of the property, steps to natural forest regeneration, and the importance of preserved land and its impact on heat islands.

- Goal (5) highlights protection and preservation of environmentally sensitive areas that promote local and regional ecological and environmental standards. The OSRP highlights the objectives such as improving water quality of rivers and other surface water bodies.

  The entirety of Bridgewater is located within level 4 UMass I-Cares Urban Heat Island map, the improvement and preservation of this park will negate some of the heat island effect. This will be achieved by the documented role parks play in climate resiliency. Parks and trees are one of the most effective ways to negate heat island effect; in some cases the cooling effect of a parkland can be felt ½ mile away from the park itself. Parks that incorporate water features can reduce flooding by providing flood zone storage capacity and also act as a natural filter to pollutants from stormwater run-off. In addition to the history of the property, the signage and interpretive kiosks will educate the public, local Bridgewater-Raynham School District students and students attending Bridgewater State University, and visitors. The ecological diversity and history of the site will provide a valuable "outdoor teaching classroom."

Bridgewater's Town Manager has made the commitment to improving this in-Town parkland as a cornerstone of downtown redevelopment and revitalization. A short walk from the downtown area, the Parkland will provide a critically needed open space and passive recreational opportunity for apartment dwellers. It will also provide critically needed opportunities for recreational activity to the Town's population and visitors who have lacked such opportunities during the COVID pandemic. Volunteers are the backbone of Bridgewater's parkland network. A committed core of volunteers has maintained the existing parkland for the past twenty-two years. Recognizing that Stiles and Hart will require more effort to maintain than the group of volunteers can provide, in FY2020 the Town Manager budgeted for a Park Steward position and the Town Council appropriated those funds.

Park accessibility is a key focus point of this proposal. Stiles and Hart is located in a central in-Town area and is easily accessible via biking, walking, or taking public transit that travels the Broad Street (Route 18) corridor. Located directly south of Stiles and Hart Parkland is a shopping area that is centrally located and is easily accessed by public transit and other modes of transit. Bridgewater State University is also located south of the Parkland. It is home to roughly 12,000 students, faculty and staff and is an easy walk to the site.

In addition to improved accessibility, the Project proposes to create new trails and better connections to existing trails. This Project proposal includes contract with professional trail designers to assess the site and recommend improvement to trails, creation of new trails and potential decommissioning of existing trails if they are inappropriately placed in a wetlands or environmentally sensitive area.

In summary, the Stiles and Hart Parkland Improvement Project would make substantive improvements to a critically important in-Town open space property and meet a number of the goals set forth in Bridgewater Open Space Plan and the Bridgewater Master Plan. It will improve public access to a vibrant and varied property and provide more passive recreation options to Bridgewater's residents and visitors.

Budget Description:

The Stiles and Hart Parkland improvement project is part of a long-term vision for the Town and Residents of Bridgewater. The estimated total budget for this project is $1,076,010.00, of which 20% is engineering and contingency cost which is not eligible for reimbursement in this grant application.

$896,675.00 is eligible for up to 50% of reimbursement with the Land and Water Conservation Fund Grant. Of which, the municipal share would be $448,337.50. In order to fund this project proposal, the Town Manager has drafted a loan order seeking a $1,300,000.00 (One million three hundred thousand dollars) to be appropriated from the available amounts in the Community Preservation Fund (CPF) Reserve Balance and the Open Space Reserves.

The Town Manager is confident that this appropriation will be supported by a vote of the Town Council, the improvement and creation of new trails and recreation opportunities available to all at Stiles and Hart Parkland have been an asset the Town Council has sought to carry out for quite a number of years.

1/20/2022

Improvements to Stiles & Hart Conservation Area

Cost Estimate

Item	Quantity	Unit Price	Cost
Footbridge/boardwalk	565 l.f.	$ 470.00	$ 265,550.00
Observation Platform	1	$ 21,500.00	$ 21,500.00
Accessible trails:			
Earth excavation	1,500 c.y.	$ 48.00	$ 72,000.00
Fine grade & compact	4,500 s.y.	$ 8.00	$ 36,000.00
Gravel	750 c.y.	$ 55.00	$ 41,250.00
Stone dust	1,110 ton	$ 85.00	$ 94,350.00
Geotextile	2,250 s.y.	$ 8.00	$ 18,000.00
Existing trails:			
Clearing/trimming	7,000 l.f.	$ 17.65	$ 123,550.00
Parking Area:			
Clearing	0.55 acre	$ 44,000.00	$ 24,200.00
Earth excavation	830 c.y.	$ 48.00	$ 39,840.00
Fine grade & compact	2,500 s.y.	$ 8.00	$ 20,000.00
Gravel	600 c.y.	$ 55.00	$ 33,000.00
Reclaimed asphalt	170 c.y.	$ 65.50	$ 11,135.00
Guardrail	340 l.f.	$ 60.00	$ 20,400.00
Gate	1 each	$ 7,500.00	$ 7,500.00
Ammenities:			
Picnic tables	2 each	$ 3,200.00	$ 6,400.00
Benches	10 each	$ 3,000.00	$ 30,000.00
Kiosks / signs	16 each	$ 2,000.00	$ 32,000.00
		Construction Total:	$ 896,675.00
		20% Engineering & Contingency:	$ 179,335.00
		Project Total:	**$ 1,076,010.00**

Preliminary Park Improvement Design

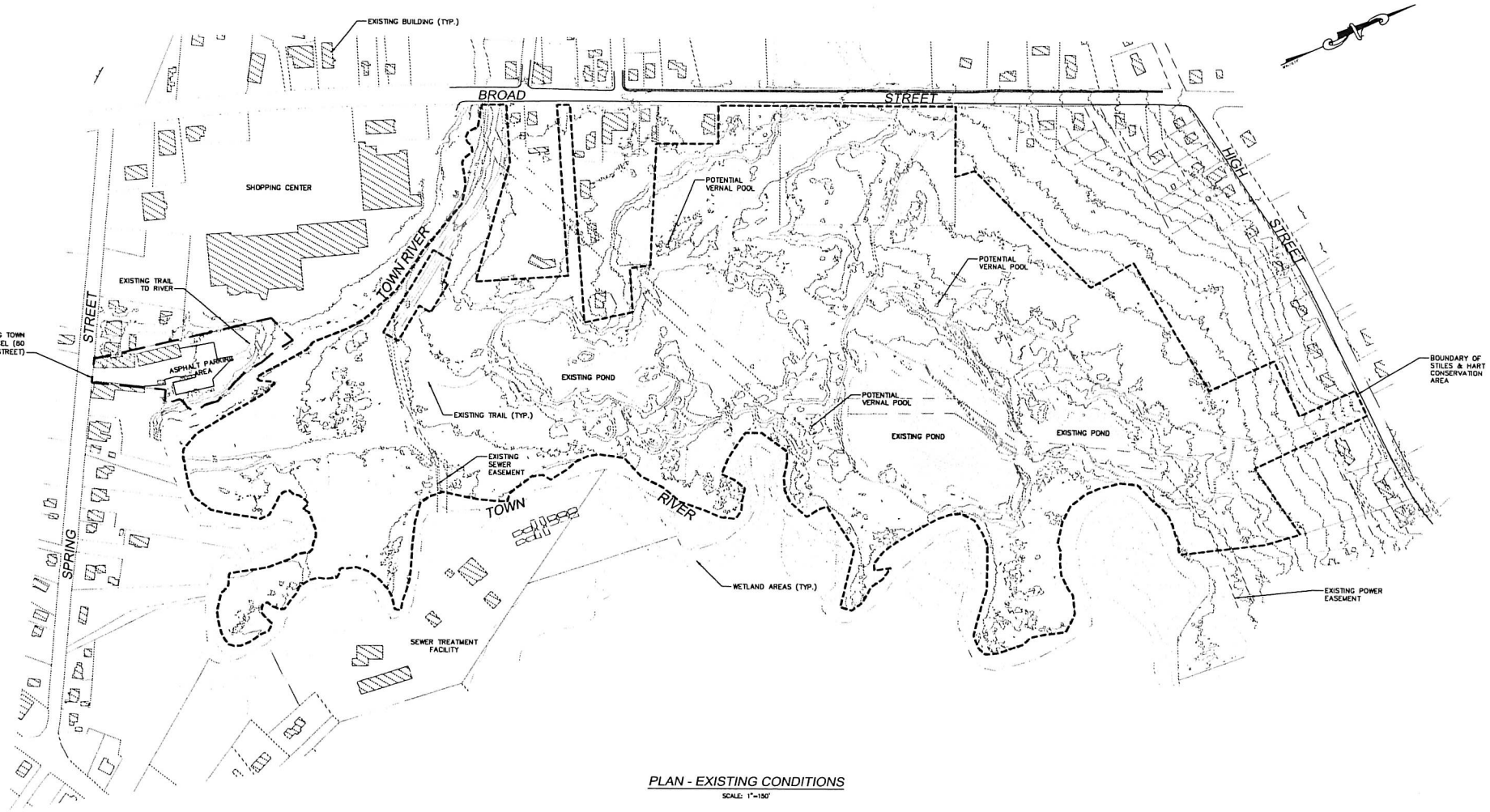

PLAN - EXISTING CONDITIONS

SCALE: 1"=150'

NOTES:

1. PROPERTY LINE AND EASEMENT INFORMATION FOR STILES & HART PARCELS TAKEN FROM "PLAN OF LAND ON BROAD STREET AND HIGH STREET IN BRIDGEWATER, MASSACHUSETTS", DATED MAY 24, 1999, BY OUTBACK ENGINEERING, INC.
2. OTHER PARCEL DATA FROM MassGIS ASSESSOR'S PARCELS SHAPE FILES.
3. BUILDINGS/STRUCUTRES FROM MassGIS STRUCTURES DATALAYER.
4. TOPOGRAPHY FROM NOAA 2013-2014 POST-SANDY LIDAR INFORMATION. DATUM IS NAVD 1988.
5. WETLANDS POLYGONS FROM MassDEP WETLANDS DATALAYER ON THE MassGIS WEBSITE.
6. EXISTING TRAILS MAPPED BY AMORY ENGINEERS, P.C., JANUARY 13, 2022.

PRELIMINARY

FOR GRANT APPLICATION AND PERMITTING PURPOSES ONLY NOT INTENDED TO BE USED FOR CONSTRUCTION

REVISIONS

NO	ITEM	DATE
1.	ISSUED FOR GRANT APPLICATION	1/20/22

AMORY ENGINEERS, P.C. COMMONWEALTH OF MASSACHUSETTS PATRICK G. STENHAM CIVIL No. 41488 REGISTERED PROFESSIONAL ENGINEER

DATE: JANUARY 20, 2022

AMORY ENGINEERS, P.C.
DUXBURY, MASSACHUSETTS

DRAWN BY:	PGB	FILE NAME:	AS SHOWN	SCALE:	AS SHOWN
DESIGNED BY:	PGB	JOB NO:	**	DWG NO:	--
CHECKED BY:	RSJ	DATE:	1/20/22	CONTRACT:	--

CONSERVATION DEPARTMENT
BRIDGEWATER, MASSACHUSETTS

IMPROVEMENTS TO STILES & HART CONSERVATION AREA
EXISTING CONDITIONS
OVERALL PLAN OF PARK

CIVIL

SHEET 1 OF 5

COPYRIGHT © BY AMORY ENGINEERS, P.C.
THIS DOCUMENT MAY NOT BE REPRODUCED, STORED IN A RETRIEVAL SYSTEM, OR TRANSMITTED IN ANY FORM OR BY ANY MEANS, ELECTRONIC, MECHANICAL, PHOTOCOPYING, RECORDING, OR OTHERWISE, WITHOUT THE EXPRESS WRITTEN CONSENT OF AMORY ENGINEERS, P.C. WITH THE EXCEPTION OF ANY REGULATORY AUTHORITY WHICH MAY REPRODUCE IT IN CONJUNCTION WITH THE PERFORMANCE OF OFFICIAL BUSINESS UNDER ITS JURISDICTION. ANY MODIFICATION MADE TO THIS DOCUMENT WITHOUT THE EXPRESS WRITTEN CONSENT OF AMORY ENGINEERS, P.C. SHALL RENDER IT UNUSABLE.

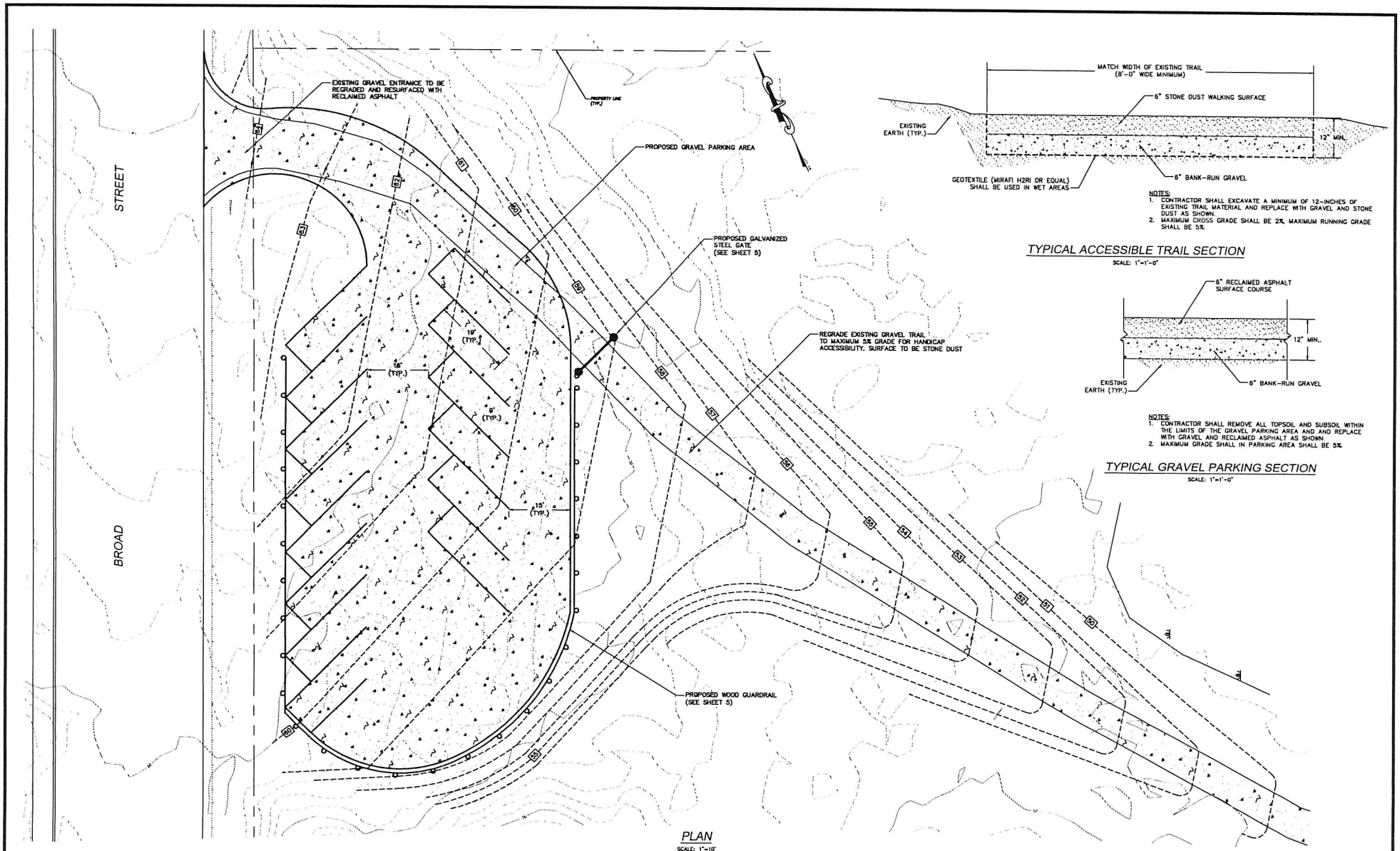

PLAN
SCALE: 1"=10'

PRELIMINARY
FOR GRANT APPLICATION AND PERMITTING PURPOSES ONLY NOT INTENDED TO BE USED FOR CONSTRUCTION

REVISIONS		
NO.	ITEM	DATE
1.	ISSUED FOR GRANT APPLICATION	1/20/22

AMORY ENGINEERS, P.C. — COMMONWEALTH OF MASSACHUSETTS — PATRICK S. BRENNAN — CIVIL — No. 41485 — REGISTERED PROFESSIONAL ENGINEER
DATE: JANUARY 20, 2022

AMORY ENGINEERS, P.C.
DUXBURY, MASSACHUSETTS

DRAWN BY:	PGB	FILE NAME:	AS SHOWN	SCALE:	AS SHOWN
DESIGNED BY:	PGB	JOB NO:	--	DWG NO:	---
CHECKED BY:	RSJ	DATE:	1/20/22	CONTRACT:	---

CONSERVATION DEPARTMENT
BRIDGEWATER, MASSACHUSETTS

IMPROVEMENTS TO STILES & HART CONSERVATION AREA
BROAD STREET PARKING AREA & ACCESSIBLE TRAIL - PLAN & SECTIONS

CIVIL

SHEET 3 OF 5

COPYRIGHT © BY AMORY ENGINEERS, P.C.
NO PART OF THIS DOCUMENT MAY BE REPRODUCED, STORED IN A RETRIEVAL SYSTEM, OR TRANSMITTED IN ANY FORM OR BY ANY MEANS, ELECTRONIC, MECHANICAL, PHOTOCOPYING, RECORDING, OR OTHERWISE, WITHOUT THE EXPRESS WRITTEN CONSENT OF AMORY ENGINEERS, P.C. WITH THE EXCEPTION OF ANY REGULATORY AUTHORITY WHICH MAY REPRODUCE IT IN CONJUNCTION WITH THE PERFORMANCE OF OFFICIAL BUSINESS UNDER ITS JURISDICTION. ANY MODIFICATION MADE TO THIS DOCUMENT WITHOUT THE EXPRESS WRITTEN CONSENT OF AMORY ENGINEERS, P.C. SHALL RENDER IT UNUSABLE.

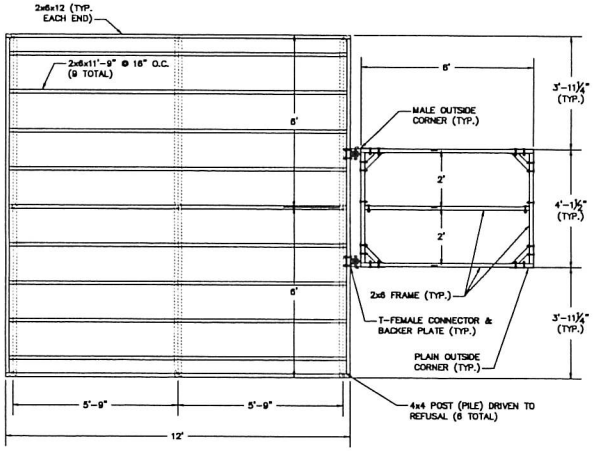

PLATFORM FRAMING PLAN

SCALE: 1/2" = 1'-0"

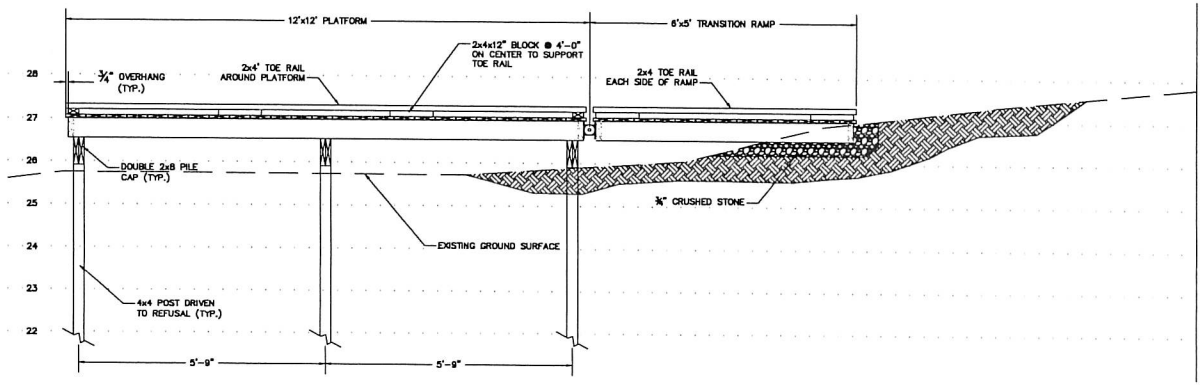

PLATFORM PROFILE

SCALE: 3/4" = 1'-0"

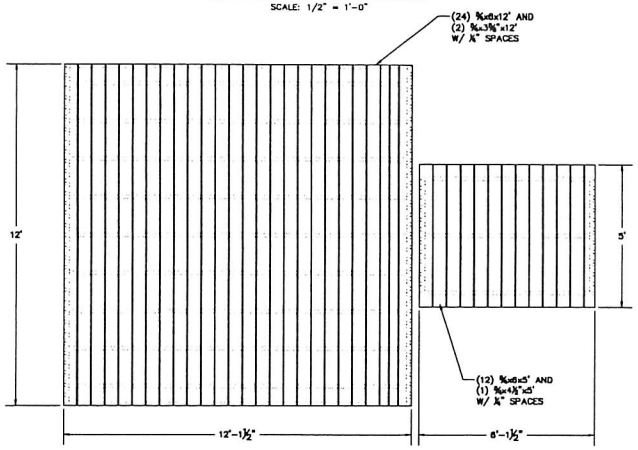

PLATFORM DECKING PLAN

SCALE: 1/2" = 1'-0"

NOTES:

1. ALL LUMBER SHALL BE PRESSURE TREATED (ACQ – ALKALINE COPPER QUATERNARY 0.60 PCF RETENTION OR CA-B COPPER AZOLE 0.31 PCF RETENTION) EASTERN WHITE PINE OR SOUTHERN YELLOW PINE, NO. 1 STRUCTURAL, SURFACED FOUR SIDES. PRESERVATIVE TREATMENT SHALL BE TO AWPA STANDARDS C-3 AND C-18 (USE CATEGORY 3A).
2. ALL HARDWARE SHALL BE HOT DIPPED GALVANIZED CONFORMING TO ASTM-A153 (FASTENERS) OR ASTM-A653 AND -A123 (CONNECTOR AND SHEET PRODUCTS).
3. ALL ANGLES, WASHER PLATES, OUTSIDE CORNER BRACKETS, INSIDE CORNER BRACKETS, MALE & FEMALE T-CONNECTORS SHALL BE STANDARD ITEMS AS MANUFACTURED BY PERMAFLOAT, PLAYSTAR, MULTINAUTIC OR EQUAL.
4. EACH PILE TO PILE CAP CONNECTION SHALL BE MADE WITH SIMPSON STRONG-TIE MODEL BC4Z POST CAPS (12 TOTAL).
5. PILE CAP TO FRAME CONNECTIONS SHALL BE MADE WITH SIMPSON STRONG-TIE MODEL H2.5A HURRICANE TIES (48 TOTAL).

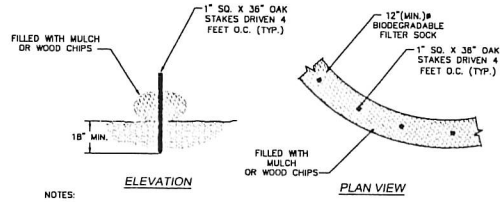

NOTES:

1. FILTER SOCK SHALL BE PLACED PRIOR TO START OF WORK.
2. OAK STAKES SHALL BE DRIVEN AT LEAST 18" MIN. INTO NATIVE SOIL.
3. FILTER SOCK SHALL BE PLACED AT THE LOCATIONS SHOWN BEFORE ANY EXCAVATION OR EARTH MOVING OPERATIONS.

FILTER SOCK DETAIL

NOT TO SCALE

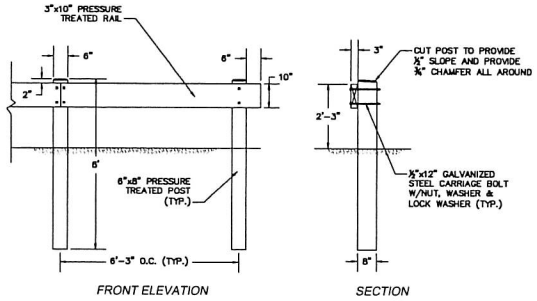

WOOD GUARDRAIL DETAILS

SCALE: 1/2"=1'-0"

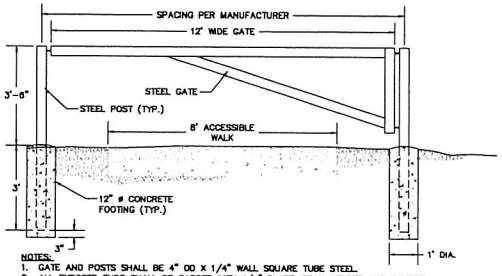

NOTES:

1. GATE AND POSTS SHALL BE 4" OD X 1/4" WALL SQUARE TUBE STEEL.
2. ALL EXPOSED ENDS SHALL BE CAPPED WITH 1/4" PLATE, SEAM WELDED AND SANDED SMOOTH.
3. FURNISH WITH LOCK ASSEMBLY AND TAMPER-PROOF HINGES.
4. ENTIRE ASSEMBLY SHALL BE HOT-DIPPED GALVANIZED.

GALVANIZED GATE DETAIL

SCALE: 1/2"=1'-0"

PRELIMINARY

FOR GRANT APPLICATION AND PERMITTING PURPOSES ONLY NOT INTENDED TO BE USED FOR CONSTRUCTION

REVISIONS		
NO.	ITEM	DATE
1.	ISSUED FOR GRANT APPLICATION	1/20/22

AMORY ENGINEERS, P.C. — COMMONWEALTH OF MASSACHUSETTS — PATRICK C. BRENNAN — CIVIL — No. 41488 — REGISTERED PROFESSIONAL ENGINEER — DATE: JANUARY 20, 2022

AMORY ENGINEERS, P.C.
DUXBURY, MASSACHUSETTS

DRAWN BY:	PGB	FILE NAME:	AS SHOWN	SCALE:	AS SHOWN
DESIGNED BY:	PGB	JOB NO.	**	DWG NO.	--
CHECKED BY:	RSJ	DATE:	1/20/22	CONTRACT:	--

CONSERVATION DEPARTMENT
BRIDGEWATER, MASSACHUSETTS

IMPROVEMENTS TO STILES & HART CONSERVATION AREA
OBSERVATION / FISHING PLATFORM
PLANS, PROFILE & DETAILS

CIVIL

SHEET 5 OF 5

COPYRIGHT © BY AMORY ENGINEERS, P.C.
NO PART OF THIS DOCUMENT MAY BE REPRODUCED, STORED IN A RETRIEVAL SYSTEM, OR TRANSMITTED IN ANY FORM OR BY ANY MEANS, ELECTRONIC, MECHANICAL, PHOTOCOPYING, RECORDING OR OTHERWISE, WITHOUT THE EXPRESS WRITTEN CONSENT OF AMORY ENGINEERS, P.C. WITH THE EXCEPTION OF ANY REGULATORY AUTHORITY WHICH MAY REQUIRE IT IN CONNECTION WITH THE PERFORMANCE OF WITHIN BUSINESS UNDER ITS JURISDICTION. ANY MODIFICATION MADE TO THIS DOCUMENT WITHOUT THE EXPRESS WRITTEN CONSENT OF AMORY ENGINEERS, P.C. SHALL RENDER IT UNUSABLE.

Draft Municipal Vote

Town of Bridgewater, Massachusetts
Stiles and Hart Parkland Improvement Project Loan Order

ORDERED, that $1,300,000 is appropriated for the purpose of paying costs associated with improvements to Stiles and Hart Parkland, located at 0 Broad Street and for the payment of all costs incidental and related thereto (the "Project"), and that to meet this appropriation, up to $1,300,000 (One million three hundred thousand dollars) is hereby appropriated from available amounts in the Community Preservation Fund Reserve Balance and the Open Space Reserves, and the Treasurer, with the approval of the Town Manager, is authorized to borrow $1,300,000 (One million three hundred thousand dollars) under and pursuant to Chapter 44, Section 7(3) and Chapter 44B of the General Laws, or pursuant to any other enabling authority, and to issue bonds or notes of the Town therefor; and that the Town Manager is authorized to contract for and expend any grants, aid or gifts available to pay costs of the Project, and any borrowing authorized by this Loan Order shall be reduced to the extent of any and all grants received by the Town on account of the Project; and that the Town Manager is authorized to take any other action necessary or convenient to carry out the Project.

Copy of Property Deed

90345

PL 99-456

QUITCLAIM DEED

JEAN H. ANDREWS, BARBARA G. PAGE, JUDITH FRIEDMAN, ERIC J. ANDREWS and STILES & HART BRICK CO.

Received & Recorded
PLYMOUTH COUNTY
REGISTRY OF DEEDS
30 JUN 1999 09:49AM
RICHARD C.SEIBERT
REGISTER
Bk 17615 Pg 107-110

of 7 Virginia Drive, Lakeville, Plymouth County, Massachusetts

for consideration paid, and in full consideration of
One Hundred Forty Thousand and 00/100 Dollars ($140,000.00)

grant to **THE INHABITANTS OF THE TOWN OF BRIDGEWATER**

of c/o Office of Community Development, Town Hall, Bridgewater, MA 02324

with quitclaim covenants

The land situated in Bridgewater, Plymouth County, Massachusetts bounded and described in Exhibit "A" attached hereto.

The land hereby conveyed is conveyed for conservation purposes in accordance with the purposes set forth in G.L. c. 40, §8C and shall be under the care and custody of the Conservation Commission of the Town of Bridgewater.

The undersigned, Stiles & Hart Brick Co., hereby certifies that this conveyance does not represent a sale or transfer of all or substantially all of the assets of the corporation.

WITNESS our hands and seals as of the 24th day of June, 1999.

Jean H. Andrews

Barbara G. Page

Judith Friedman

Eric J. Andrews

BROCKTON
DEEDS REG#22

CANCELLED

06/30/99 9:44AM 01
000000 #1753

FEE $638.40

CASH $638.40

Return to
Hal Clark, Balboni + Golden
12c Belmont St
Brockton, MA 02301

COMMONWEALTH OF MASSACHUSETTS

Worcester, ss. June 25th 1999

Then personally appeared the above-named Eric J. Andrews and acknowledged the foregoing instrument to be his free act and deed before me,

Rhonda A Bailey Notary Public
My Commission Expires: 10/07/05

COMMONWEALTH OF MASSACHUSETTS

Plymouth, ss. June 30, 1999

Then personally appeared the above-named Jean H. Andrews, the President + Treasurer and acknowledged the foregoing instrument to be the free act and deed of Stiles & Hart Brick Co. before me,

Mark C. Gilden Notary Public
My Commission Expires: 3/01/02
Mark C Gilden

Bk3513 Pg 272

WE, JOHN J. BERTELLI and ANITA B. BERTELLI, both

of Bridgewater, Plymouth County, Massachusetts,

being married, for consideration paid, grant to the TOWN OF BRIDGEWATER,

MEN

with quitclaim covenants

Excluding: A certain parcel of land with the buildings thereon, situated off the Northerly side of Spring Street, in said Bridgewater, and bounded as follows:
[Description and encumbrances, if any]

Begin at the Northerly corner of premises formerly owned by Laurent Guimet, said corner being about 243 feet Northerly from Spring Street;

thence, North 80°35' West, in a line parallel with said Spring Street and distant therefrom 243 feet, about 112 feet to a corner and land now or formerly of Wilbur;
thence, in said Wilbur's line and land now or formerly of Carver, North 31° East to a corner;
thence, Easterly by land now or formerly of Carver, 5 rods, 5 links to the Town River;
thence, by said river, following its course, to land formerly of said Guimet,
thence, North 50°35' West by land formerly of said Guimet, 90 feet to a corner and the point of beginning.

Said premises are conveyed together with a right of way for all purposes, twelve (12) feet in width, extending from the granted premises along the Easterly side of land now or formerly of Arakel H. Sarkisian, et ux to said Spring Street.

Being the same premises conveyed to Thomas F. Silva and Mary Silva by Arakel H. Sarkisian and Mary A. Sarkisian by Deed dated February 14, 1946, and recorded with Plymouth County Registry of Deeds, in Book 1907, Page 204.

Also a certain triangular-shaped piece of land containing 0.03 acre, more or less, situated Northeasterly from Spring Street, in said Bridgewater, and bounded and described as follows, to wit:

Begin at a cement bound in line of land now or formerly of Wilber, and at the Northwesterly corner of land now or formerly of the Town of Bridgewater;

thence, by land now or formerly of Wilber, North 21°00' East, thirty and 21/100 (30.21) feet to land now or formerly of Thomas F. Silva, et ux;

thence, by land of said Thomas F. Silva, et ux, South 50° 35' East, one hundred fifty-one and 50/100 (151.50) feet, more or less, to a cement bound and corner of land now or formerly of Guimet, which cement bound also marks a corner of land now or formerly of the Town of Bridgewater;

(*Individual — Joint Tenants — Tenants in Common — Tenants by the Entirety.)

*** Electronic Recording ***
Doc#: 00054316
Bk: 52967 Pg: 159 Page: 1 of 11
Recorded: 06/25/2020 01:25 PM
ATTEST: John R. Buckley, Jr. Register
Plymouth County Registry of Deeds

MASSACHUSETTS EXCISE TAX
Plymouth District ROD #11 001
Date: 06/25/2020 01:25 PM
Ctrl# 135473 11579
Fee: $.00 Cons: $475,000.00

QUITCLAIM DEED

Property: 0 Broad St, Bridgewater, MA 02324

Stiles & Hart Brick Company, sometimes known as Stiles & Hart Brick Co., a Connecticut Corporation, authorized to do business in Massachusetts as to an undivided interest of 43.35260%; **Eric J Andrews,** as to an undivided interest of 15.26975%; **Sara Andrews** as to an undivided interest of 10.83815%; **Diane P. Stone, as Personal Representative of the Estate of Barbara Andrews Page,** Middlesex Probate No. M-117P5827EA, pursuant to the Power of Sale contained in the will of Barbara Andrews Page, as to an undivided interest of 15.26975%; **Galen Trull,** as to an undivided interest of 3.8174375%; **Lisa Rogers** as to an undivided interest of 6.362294035%; **Eric Sky** as to an undivided interest of 2.5450092325%; and **Vanessa Friedman** as to an undivided interest of 2.5450092325%

for Four Hundred Seventy Five Thousand Dollars ($475,000.00) consideration paid

grants to **The Inhabitants of the Town of Bridgewater,** with an address at 66 Central St., Bridgewater 02324

with quitclaim covenants

the land in Bridgewater, Plymouth County, Massachusetts and being shown as Lot 1 on a plan of land entitled "Plan of Land on Broad Street and High Street in Bridgewater, Massachusetts" prepared by Outback Engineering, Inc., 321 West Grove Street, Middleborough, MA 02346, which plan is dated May 24, 1999 and recorded at the Plymouth County Registry of Deeds in Plan Book 42, Page 469.

Said Lot 1 contains 217,800 S.F. (5.00 AC.) according to said above mentioned plan.

For a more particular description reference is hereby made to said above mentioned plan.

The Grantors hereby state under the pains and penalties of perjury that the property being conveyed is vacant, unimproved land and contains no residential dwelling. Therefore, this property is not homestead property, whether recorded or automatic, and no person claims the benefit of the Massachusetts Homestead Act, MGL, Chapter 188.

The above described property is a portion of the property described in a deed from The Bridgewater Brick Co. to David B. Andrews, Jr., David B. Andrews, III, Francis O. Mansfield, and The Stiles and Hart Brick Co., which deed is dated February 10, 1965 and recorded at the Plymouth County Registry of Deeds in Book 3187, Page 263.

Bk: 52967 Pg: 161

IN WITNESS WHEREOF, the said Stiles & Hart Brick Co. has caused its corporate seal to be hereto affixed and these presents to be signed, sealed, acknowledged and delivered under the pains and penalties of perjury in its name by Lincoln D. Andrews as President and Treasurer hereto duly authorized, this 18th day of June, 2020.

Stiles & Hart Brick Company

by

Lincoln D. Andrews, President and Treasurer

THE COMMONWEALTH OF MASSACHUSETTS

Plymouth: ss

On this 18th day of June, 2020, before me, the undersigned notary public, personally appeared Lincoln D. Andrews, President and Treasurer, proved to me through satisfactory evidence of identification, which was a Massachusetts driver's license, to be the person whose name is signed on the preceding or attached document, and acknowledged to me that he signed it voluntarily for its stated purpose and as the free act and deed of Stiles & Hart Brick Company.

Notary Public: Robert J. Mather

My commission expires: January 3, 2025

ROBERT J. MATHER
Notary Public
COMMONWEALTH OF MASSACHUSETTS
My Commission Expires
January 3, 2025

THE REMAINDER OF THIS PAGE IS INTENTIONALLY LEFT BLANK
THE NEXT PAGE IS AN ADDITIONAL SIGNATURE PAGE

Witness my hand and seal on this 23rd day of APRIL, 2020.

Sara Andrews

Sara Andrews

THE STATE OF RHODE ISLAND

WASHINGTON County: ss

On this 23rd day of APRIL, 2020, before me, the undersigned notary public, personally appeared Sara Andrews, proved to me through satisfactory evidence of identification, which was DRIVERS LICENSE to be the person whose name is signed on the preceding or attached document, and acknowledged to me that she signed it voluntarily for its stated purpose and as her free act and deed.

Susan P Moore

Notary Public:

My commission expires: 10/10/20

SUSAN P. MOORE
Notary Public, State of Rhode Island
My Commission Expires 10/10/2023

THE REMAINDER OF THIS PAGE IS INTENTIONALLY LEFT BLANK
THE NEXT PAGE IS AN ADDITIONAL SIGNATURE PAGE

Bk: 62967 Pg: 165

Witness my hand and seal on this 27th day of April, 2020.

Galen Trull

Galen Trull

THE STATE OF FLORIDA

Lee County: ss

On this 27 day of April, 2020, before me, the undersigned notary public, personally appeared Galen Trull, proved to me through satisfactory evidence of identification, which was
to be the person whose name is signed on the preceding or attached document, and acknowledged to me that he signed it voluntarily for its stated purpose and as his free act and deed.

JIOVANA SOLORZANO
MY COMMISSION # GG 309350
EXPIRES March 10, 2021

Notary Public:

My commission expires: 3/10/2023

THE REMAINDER OF THIS PAGE IS INTENTIONALLY LEFT BLANK
THE NEXT PAGE IS AN ADDITIONAL SIGNATURE PAGE

Bk: 62967 Pg: 167

CALIFORNIA ACKNOWLEDGMENT **CIVIL CODE § 1189**

A notary public or other officer completing this certificate verifies only the identity of the individual who signed the document to which this certificate is attached, and not the truthfulness, accuracy, or validity of that document.

State of California
County of Los Angeles

On April 24, 2020 before me, Katalin Langhanese, Notary Public
Date — Here Insert Name and Title of the Officer

personally appeared Lisa Rogers
Name(s) of Signer(s)

who proved to me on the basis of satisfactory evidence to be the person(s) whose name(s) is/are subscribed to the within instrument and acknowledged to me that he/she/they executed the same in his/her/their authorized capacity(ies), and that by his/her/their signature(s) on the instrument the person(s), or the entity upon behalf of which the person(s) acted, executed the instrument.

KATALIN LANGHANESE
Notary Public - California
Los Angeles County
Commission # 2213356
My Comm. Expires Sep 11, 2021

Place Notary Seal and/or Stamp Above

I certify under PENALTY OF PERJURY under the laws of the State of California that the foregoing paragraph is true and correct.

WITNESS my hand and official seal.

Signature: Katalin Langhanese
Signature of Notary Public

OPTIONAL

Completing this information can deter alteration of the document or fraudulent reattachment of this form to an unintended document.

Description of Attached Document
Title or Type of Document: Quitclaim Deed
Document Date: 4-24-2020 Number of Pages: 3
Signer(s) Other Than Named Above:

Capacity(ies) Claimed by Signer(s)

Signer's Name: Lisa Rogers
☐ Corporate Officer – Title(s):
☐ Partner – ☐ Limited ☐ General
☑ Individual ☐ Attorney in Fact
☐ Trustee ☐ Guardian or Conservator
☐ Other:
Signer is Representing:

Signer's Name:
☐ Corporate Officer – Title(s):
☐ Partner – ☐ Limited ☐ General
☐ Individual ☐ Attorney in Fact
☐ Trustee ☐ Guardian or Conservator
☐ Other:
Signer is Representing:

©2018 National Notary Association

Witness my hand and seal on this day of 27 APRIL 2020.

Eric Sky

THE COMMONWEALTH OF MASSACHUSETTS

Plymouth County: ss

On this 27th day of April, 2020, before me, the undersigned notary public, personally appeared Eric Sky, proved to me through satisfactory evidence of identification, which was MA Drivers License to be the person whose name is signed on the preceding or attached document, and acknowledged to me that he signed it voluntarily for its stated purpose and as his free act and deed.

Notary Public:

CHERYL ANN SILVA
NOTARY PUBLIC
COMMONWEALTH OF MASSACHUSETTS
My Comm. Expires July 12, 2024

My commission expires:

THE REMAINDER OF THIS PAGE IS INTENTIONALLY LEFT BLANK
THE NEXT PAGE IS AN ADDITIONAL SIGNATURE PAGE

Conservation Restriction: Wildlands Trust

Grantor: Town of Bridgewater
Grantee: Wildlands Trust, Inc.
Address of Premises: east side of Broad Street, Bridgewater
For Grantor's Title, see: Plymouth County Registry of Deeds Book 52967, Page 159

TOWN OF BRIDGEWATER
CONSERVATION RESTRICTION
UNDER THE COMMUNITY PRESERVATION ACT

STILES AND HART CONSERVATION AREA ADDITION
CONSERVATION RESTRICTION

The TOWN OF BRIDGEWATER, a municipal corporation with an address of 66 Central Square, Bridgewater, Massachusetts 02324, acting by and through its duly authorized Town Council and Conservation Commission by authority of Section 8C of Chapter 40 of the Massachusetts General Laws, for its successors and assigns ("Grantor"), acting pursuant to Sections 31, 32, and 33 of Chapter 184 of the Massachusetts General Laws, for consideration of One Dollar ($1.00), paid, grants, with Quitclaim Covenants, to WILDLANDS TRUST, INC., a Massachusetts non-profit corporation eligible under Section 32 of Chapter 184 of the Massachusetts General Laws, with an address at 675 Long Pond Road, Plymouth, Massachusetts 02360, and to its successors and permitted assigns ("Grantee"), in perpetuity and exclusively for conservation purposes, the following described Conservation Restriction on one parcel of land located on the east side of Broad Street in the Town of Bridgewater, Plymouth County, Massachusetts, consisting of approximately 5 acres, said parcel being described in Exhibit "A" and shown as Lot 1 on a reduced copy of a recorded plan of land in Exhibit B, which exhibits are attached hereto and incorporated herein (the "Premises"). The Grantee is a tax-exempt nonprofit organization, qualified under Sections 501(c)(3) and 170(h) of the internal Revenue Code, whose primary purpose is the preservation, protection or enhancement of land in its natural, scenic, historical, agricultural, forested, and/or open space condition.

I. PURPOSES:

This Conservation Restriction is defined in and authorized by Sections 31-33 of Chapter 184 of the Massachusetts General Laws and otherwise by law. The purpose of this Conservation Restriction is to assure that the Premises will be maintained in perpetuity for conservation purposes, in a natural, scenic and undeveloped condition,

also designed to include the habitats and species of conservation concern identified in the State Wildlife Action Plan.

Bio Map 2 "Core Habitat, Core Components, Aquatic Core". The Premises are proximate to an "Aquatic Core"-designated area. Aquatic Core areas provide habitat for fish and other aquatic Species of Conservation Concern. Aquatic Cores are designed to protect 10 MESA-listed fish, 17 non-listed fish, as well as 145 MESA-listed species with all or a portion of their life cycle in aquatic habitats.

Preservation of NHESP-Designated Bio Map 2 Critical Natural Landscape. The Premises are proximate to Bio Map 2 "Critical Natural Landscape". Said Critical Natural Landscape areas, more particularly defined in the following clause, complement and often overlap Core Habitat, including large natural Landscape Blocks and buffering uplands around coastal, wetland and aquatic Core Habitats to help ensure their long-term integrity.

Upland Buffers of Wetland Core, Bio Map 2 Critical Natural Landscape. The Premises are proximate to an "Upland Buffer of Wetland Cores"-designated area. Said areas encompass upland areas adjacent to all Wetland Cores. The protection of these upland areas will help support the functioning of each wetland over the long-term.

3. Landscape Connectivity/Wildlife Corridors

Expansion of Protected Open Space Corridor. The Premises is directly adjacent to and expands the Grantor's 70-acre Stiles and Hart Conservation Area and its associated wildlife corridor. Such corridors are essential for the migration, propagation, foraging, and shelter of wildlife.

4. Public Access and Passive Recreational Opportunities

Preservation and enhancement of public recreational opportunities. The Premises will be publicly accessible for passive, non-motorized recreational activities, to include hiking, nature study, and cross-country skiing, and can provide enhanced access to the directly adjacent Stiles and Hart Conservation Area.

5. Scenic Views

Protection of Scenic Views. The Premises provide scenic wooded views that are visible from Broad Street/Massachusetts State Route 18, a public way in the Town of Bridgewater, and provide a marked visual contrast to the developed landscapes situated nearby to the south.

6. Congruence with Public Policy Goals

tower, solar panel, solar array, conduit, line or other temporary or permanent structure or facility on, above or under the Premises;

(2) Mining, excavating, dredging or removing from the Premises of soil, loam, peat, gravel, sand, rock or other mineral resource or natural deposit or otherwise making topographical changes to the area;

(3) Placing, filling, storing or dumping of soil, refuse, trash, vehicle bodies or parts, rubbish, debris, junk, waste or other substance or material whatsoever or the installation of underground storage tanks;

(4) Cutting, removing or otherwise destroying trees, grasses or other vegetation;

(5) Activities detrimental to drainage, flood control, water conservation, water quality, erosion control, soil conservation, wildlife habitat, or archaeological conservation;

(6) Use, parking or storage of vehicles including motorcycles, mopeds, all-terrain vehicles, trail bikes, or any other motorized vehicles on the Premises except for vehicles necessary for public safety (i.e., fire, police, ambulance, other government officials) in carrying out their official duties;

(7) Subdivision or conveyance of a part or portion of the Premises alone, or division or subdivision of the Premises (as compared to conveyance of the Premises in its entirety which shall be permitted), and no portion of the Premises may be used towards building or development requirements on this or any other parcel;

(8) The use of the Premises for more than *de minimis* commercial recreation, business, residential or industrial use;

(9) Any other use of the Premises or activity which is inconsistent with the purpose of this Conservation Restriction or which would materially impair its conservation values.

B. Reserved Rights and Exceptions

The Grantor reserves the right to conduct or permit the following activities and uses on the Premises, but only if such uses and activities do not materially impair the conservation values or purposes of this Conservation Restriction:

(1) Public Access Amenities. With prior approval of the Grantee, structures and improvements incidental to conservation and passive outdoor recreation purposes may be constructed, maintained, and replaced, provided they are located away from sensitive natural resources described herein in Section I, "Purposes", above. Such structures and improvements may include one (1) restroom facility, information kiosks; benches; and one (1) parking area, provided that the parking area shall be reasonably sized to accommodate public access to the Premises and

(8) Fences. The placing of sight-pervious fences that do not interfere with the passage of wildlife and that are reasonably required by Grantor for permissible uses of the Premises and that do not interfere with the conservation values;

(9) Signs. The erection, maintenance and replacement of signs with respect to trespass, trail access, identity and address of the occupants, sale of the Premises, the Grantee's interest in the Premises, the Reserved Rights, and the conservation values;

(10) Outdoor Passive Recreational Activities. Non-motorized boating, hiking, horseback riding, cross-country skiing, hunting, fishing and trapping, and other non-motorized outdoor recreational activities that do not materially alter the landscape, do not degrade environmental quality, and do not involve more than minimal use for commercial recreational activities;

(11) Site Restoration. Any work undertaken in conjunction with the Reserved Rights described in this Paragraph II(B) shall seek to minimize disturbance to the Conservation Values and other natural features within the Premises that may be impacted as a result of exercising of any of the Reserved Rights described herein. Upon completion of any site work performed in conjunction with the Reserved Rights described in this Paragraph II(B), any disturbed areas not necessary for the use or exercise of a reserved right shall be restored substantially to the conditions with respect to soil material, grade, and vegetated ground cover as documented in the Baseline Report, as applicable, or in conformance with the conditions with respect to soil material, grade, and vegetated ground cover that existed prior to said work, if said work is done in any area not documented in the Baseline Report;

(12) Permits, Regulations, Laws. The exercise of any right reserved by Grantor under this Paragraph II(B) shall be in compliance with zoning, the Wetlands Protection Act, and all other applicable federal, state and local laws, rules, regulations, and permits. The inclusion of any reserved right requiring a permit from a public agency does not imply that the Grantee or the Commonwealth takes any position whether such permit should be issued;

(13) Best Management Practices. The exercise of any right reserved by Grantor under this Paragraph II(B) shall follow, when available and if applicable, established, up to date, and regionally-applicable Best Management Practices or similar standards developed by a governmental agency or other entity with known expertise in the area of practice and designed to protect the natural features potentially affected by the action(s);

C. Notice and Approval

Whenever notice to or approval by Grantee is required, Grantor shall notify Grantee in writing not less than 60 days prior to the date Grantor intends to undertake the activity in

B. Non-Waiver.

Enforcement of the terms of this Conservation Restriction shall be at the discretion of Grantee. Any election by the Grantee as to the manner and timing of its right to enforce this Conservation Restriction or otherwise exercise its rights hereunder shall not be deemed or construed to be a waiver of such rights.

C. Disclaimer of Liability

By acceptance of this conservation restriction, the Grantee does not undertake any liability or obligation relating to the condition of the Premises pertaining to compliance with and including, but not limited to, hazardous materials, zoning, environmental laws and regulations, or acts not caused by the Grantee or its agents.

D. Acts Beyond the Grantor's Control

Nothing contained in this Conservation Restriction shall be construed to entitle the Grantee to bring any actions against the Grantor for any injury to or change in the Premises resulting from causes beyond the Grantor's control, including but not limited to fire, flood, storm and earth movement, or from any prudent action taken by the Grantor under emergency conditions to prevent, abate, or mitigate significant injury to the Premises resulting from such causes. In the event of any such occurrence, the Grantor and Grantee will cooperate in the restoration of the Premises, if desirable and feasible.

IV. ACCESS

It is the intention of the Grantor and Grantee that the general public may enter upon the Premises for passive, outdoor recreational and educational uses and activities which are consistent with the protection of the conservation values. Therefore, the Grantor hereby grants access to the Premises to general public and agrees to take no action to prohibit or discourage access to and use of the Premises by the general public, but only for daytime use and only as described in Paragraph II(B)(10) provided that such agreement by Grantor is subject to the Grantor's reserved right to establish reasonable rules, regulations, and restrictions on such permitted recreational use by the general public for the protection of the purposes and conservation values of this Conservation Restriction. It is also the intention of the Parties that any public use which is permitted by the terms of this Conservation Restriction constitutes permission to use the Premises for purposes described in Section 17C of Chapter 21 of the Massachusetts General Laws, and that the Parties hereto benefit from exculpation from liability to the extent provided in such section.

The Grantor hereby grants to the Grantee, or its duly authorized agents or representatives, the right to enter the Premises upon reasonable notice and at reasonable times, for the purpose of inspecting the Premises to determine compliance with or to enforce this Conservation Restriction. The Grantor also grants to the Grantee, after notice of a violation and failure of the Grantor to cure said violation, the right to enter the Premises for the purpose of taking any and all actions with respect to the Premises as may be

VI. ASSIGNABILITY

A. Running of the Burden: The burdens of this Conservation Restriction shall run with the Premises in perpetuity, and shall be enforceable against the Grantor and the successors and assigns of the Grantor holding any interest in the Premises.

B. Execution of Instruments: The Grantee and the Grantor are authorized to record or file any notices or instruments appropriate to assuring the perpetual enforceability of this Conservation Restriction; the Grantor, on behalf of itself and its successors and assigns, appoints the Grantee its attorney-in-fact to execute, acknowledge and deliver any such instruments on its behalf. Without limiting the foregoing, the Grantor and its successors and assigns agree themselves to execute any such instruments upon request.

C. Running of the Benefit: The benefits of this Conservation Restriction shall run to the Grantee, shall be in gross and shall not be assignable by the Grantee, except in the following instances:

> As a condition of any assignment, the Grantee shall require that the purpose of this Conservation Restriction continues to be carried out, that the assignee is not an owner of the fee in the Premises, and the assignee, at the time of the assignment, qualifies under Section 170(h) of the Internal Revenue Code of 1986, as amended, and applicable regulations thereunder, and is a donee eligible to receive this Conservation Restriction under Section 32 of Chapter 184 of the Massachusetts General Laws. Any assignment will comply with Article 97 of the Amendments to the Constitution of the Commonwealth of Massachusetts, if applicable.

VII. SUBSEQUENT TRANSFERS

The Grantor agrees to incorporate by reference the terms of this Conservation Restriction in any deed or other legal instrument which grants any interest in all or a portion of the Premises, including a leasehold interest and to notify the Grantee not less than twenty (20) days prior to the execution of any such transfer. Failure to do any of the above shall not impair the validity or enforceability of this Conservation Restriction. Any transfer will comply with Article 97 of the Amendments to the Constitution of the Commonwealth of Massachusetts, if applicable.

The Grantor shall not be liable for violations occurring after its ownership. Liability for any acts or omissions occurring prior to any transfer and liability for any transfer if in violation of this Conservation Restriction shall survive the transfer. Any new owner shall cooperate in the restoration of the Premises or removal of violations caused by prior owner(s) and may be held responsible for any continuing violations.

XII. NOTICES

Any notice, demand, request, consent, approval or communication that either party desires or is required to give to the other shall be in writing and either served personally or sent by first class mail, postage pre-paid, addressed as follows:

To Grantor: Town of Bridgewater Conservation Commission
66 Central Square
Bridgewater, MA 02324

To Grantee: Wildlands Trust, Inc.
675 Long Pond Road
Plymouth, MA 02360

or to such other address as any of the above parties shall designate from time to time by written notice to the other or, if notice is returned to sender, to an address that is reasonably ascertainable by the parties.

XIII. GENERAL PROVISIONS

A. Controlling Law: The interpretation and performance of this Conservation Restriction shall be governed by the laws of the Commonwealth of Massachusetts.

B. Liberal Construction: Any general rule of construction to the contrary notwithstanding, this Conservation Restriction shall be liberally construed in favor of the grant to effect the purpose of this Conservation Restriction and the policy and purposes of Sections 31-33 of Chapter 184 of the Massachusetts General Laws. If any provision in this instrument is found to be ambiguous, any interpretation consistent with the purpose of this Conservation Restriction that would render the provision valid shall be favored over any interpretation that would render it invalid.

C. Severability: If any provisions of this Conservation Restriction or the application thereof to any person or circumstance is found to be invalid, the remainder of the provision of this Conservation Restriction shall not be affected thereby.

D. Entire Agreement: This instrument sets forth the entire agreement of the parties with respect to the Conservation Restriction and supersedes all prior discussions, negotiations, understandings or agreements relating to the Conservation Restriction, all of which are merged herein.

XIV. MISCELLANEOUS:

A. Pre-existing Public Rights. Approval of this Conservation Restriction pursuant to

We, the undersigned, being a majority of the Conservation Commission of the Town of Bridgewater, Massachusetts, hereby certify that at a public meeting duly held on May 27th 2021, the Conservation Commission voted to approve and grant the foregoing Conservation Restriction to Wildlands Trust, Inc., pursuant to Section 32 of Chapter 184 and Section 8C of Chapter 40 of the Massachusetts General Laws and do hereby grant the foregoing Conservation Restriction.

Grantor: Bridgewater Conservation Commission

Marilyn MacDonald, Chair

Harry Bailey, Vice Chair

Eileen Prisco, Commissioner

COMMONWEALTH OF MASSACHUSETTS

On this day of May 27th, 2021, before me, the undersigned notary public, personally appeared Marilyn MacDonald, Chair, proved to me through satisfactory personal knowledge to the person whose name is signed above, and acknowledged the foregoing instrument to be signed by him/her voluntarily for its stated purpose, on behalf of said Conservation Commission of the Town of Bridgewater.

Notary Public

My Commission expires Dec. 18, 2026

JENNIFER LYNN BURKE
Notary Public
Commonwealth of Massachusetts
My Commission Expires
December 18, 2026

APPROVAL AND GRANT OF CONSERVATION RESTRICTION BY THE BRIDGEWATAER TOWN COUNCIL

We, the undersigned, being a majority of the Town Council for the Town of Bridgewater, Massachusetts, hereby certify that the grant of the foregoing Conservation Restriction is a valid exercise of authority of the Bridgewater Town Council and the Bridgewater Conservation Commission pursuant to Section 8C of Chapter 40 of the Massachusetts General Laws, and certify that the Town Council, at a public meeting duly held on June 29, 2021, voted to approve of in the public interest and grant to Wildlands Trust, Inc., the foregoing Conservation Restriction pursuant to Section 32 of Chapter 184 of the Massachusetts General Laws, and do hereby grant the foregoing Conservation Restriction.

Town of Bridgewater, By its Town Council

_____
Matthew Rushton, President

_____
Fred Chase, Vice President

_____
Shawn George

_____
Eric Moore

_____
Kevin Perry

_____
Peter Colombotos

_____
William Wood

_____
Frank Sousa

_____
Dennis Gallagher

APPROVAL BY SECRETARY OF ENERGY AND ENVIRONMENTAL AFFAIRS
COMMONWEALTH OF MASSACHUSETTS

The undersigned, Secretary of Energy and Environmental Affairs of the Commonwealth of Massachusetts, hereby certifies that the foregoing Conservation Restriction from the Town of Bridgewater, acting by and through its Town Council and Conservation Commission, to Wildlands Trust Inc., has been approved in the public interest pursuant to Section 32 of Chapter 184 of the Massachusetts General Laws.

Dated: June 24th, 2021

K. Theoharides

KATHLEEN A. THEOHARIDES
Secretary of Energy and Environmental Affairs

COMMONWEALTH OF MASSACHUSETTS

Suffolk, ss:

On this 24th day of June, 2021, before me, the undersigned notary public, personally appeared KATHLEEN A. THEOHARIDES, and proved to me through satisfactory evidence of identification which was personal knowledge to be the person whose name is signed on the proceeding or attached document, and acknowledged to me that she signed it voluntarily for its stated purpose.

Denise Pires

Notary Public: Denise Pires
My Commission Expires: December 28th, 2023

DENISE PIRES
Notary Public
COMMONWEALTH OF MASSACHUSETTS
My Commission Expires
December 28, 2023

EXHIBIT B – Reduced Copy of Plan of the Premises

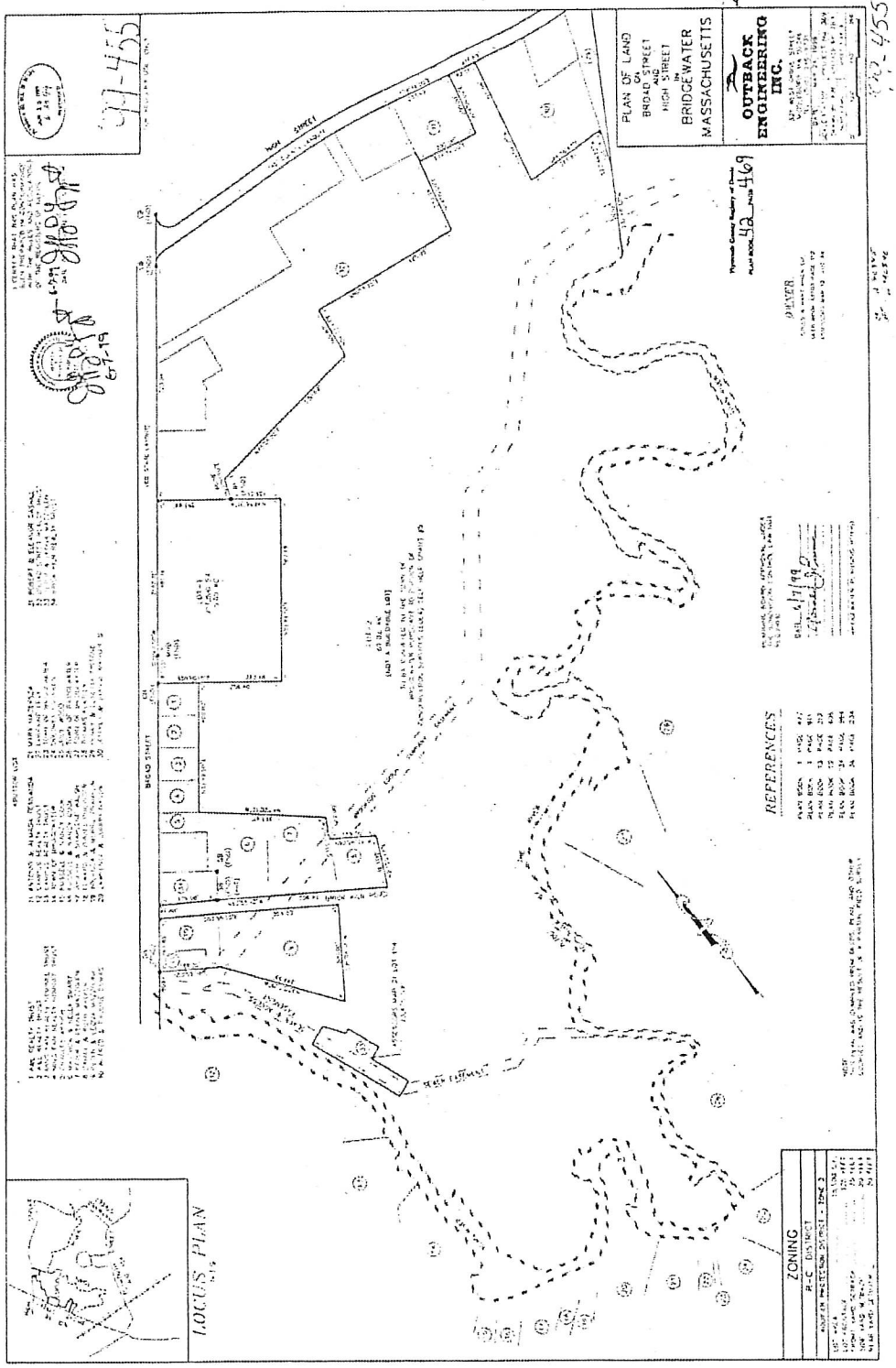

In accordance with the applicable provisions of the Town of Bridgewater Home Rule Charter and Town Council Rules and Procedures, the Town Council assembled voted, at their meeting on Tuesday, December 3, 2019, to approve the aforementioned Order by a Roll Call vote (7-0) (Councilors Fitzgibbons and Sousa absent).

A TRUE COPY ATTEST:

_____

Ann M. Holmberg
Town Council Clerk

ROLL CALL VOTE – REQUIRES MAJORITY OF THOSE PRESENT AND VOTING.

Evidence of Stewardship Activities

Letters of Support

BRIDGEWATER
STATE UNIVERSITY

January 24, 2022

Division of Conservation Services
Melissa Cryan
100 Cambridge Street, 9th Floor
Boston, MA 02114

Re: Bridgewater's Stiles and Hart Parkland Improvement Project LWCF Grant

Dear Ms. Cryan:

I am writing to support the Town of Bridgewater's application to the Land and Water Conservation Fund for funding to support improvements to the Town's 80 acre Stiles and Hart Parkland which is situated along the banks of the Town River. Stiles and Hart has always been an important part of Bridgewater's history and ecology and has provided in-town recreational use activities. Improvements contemplated for the Parkland would substantially improve utilization and provide a valuable resource that is easily accessible and open to residents for hiking, fishing and recreational activities.

The Town of Bridgewater "Stiles and Hart Improvement Project Plan", which incorporates the work of town staff, stakeholders and consultants forms the basis of this proposal to address climate change resiliency while also establishing passive recreation activities for the residents of Bridgewater, students of Bridgewater State University, and the region. The plans include creation of accessible trails and fishing opportunities, expansion and improvement of existing trails, creation of better parking and access over a pedestrian bridge, creation of environmental education opportunities for university and secondary school students, and fostering environmental stewardship in Bridgewater,

The Stiles and Hart Parkland Improvement Project Grant funds would go towards final engineering, design, permitting and construction of a robust in-town resource. The funds ensure that Stiles and Hart receives the improvements it needs, but also ensure that the parkland remains an important undeveloped area that will offset the adverse effects of climate change while allowing for ongoing recreational, terrestrial, and aquatic recreational activities in perpetuity.

Sincerely,

Frederick W. Clark, Jr., Esq.
President, Bridgewater State University

Office of the President • Boyden Hall, Room 200 • Bridgewater, MA 02325
508.531.1201 • FAX 508.531.1707 • www.bridgew.edu

Office of
Representative Angelo D'Emilia
Commonwealth of Massachusetts

January 18, 2022

Division of Conservation Services
Melissa Cyan
100 Cambridge Street, 9th Floor
Boston, MA 02114

RE: Town of Bridgewater's Stiles & Hart Parkland Improvement Project LWCF Grant

Dear Ms. Cyan,

I am writing to you today in support of the Town of Bridgewater's Land and Water Conservation Fund application for funding to support improvements to the Town's 80-acre Stiles and Hart Parkland. I represent this town and know how important this funding would be to our community to complete these improvements.

Stiles and Hart Parkland is situated along the banks of the Town River and is not only an important part of Bridgewater's history and ecology, but also provides a place for many in-town recreational use activities. Improvements contemplated for the Parkland would substantially improve utilization and provide a valuable resource that is easily accessible and open to residents for hiking, fishing, and recreational activities.

The basis of our "Stiles and Hart Improvement Project Plan" proposal addresses climate change resiliency while also establishing passive recreation activities for the Bridgewater residents, Bridgewater State University students, and the region. Incorporating the work of town staff, stakeholders and consultants, the plans include the creation of accessible trails and fishing opportunities, expansion and improvement of existing trails, creation of better parking and access over a pedestrian bridge, creation of environmental education opportunities for university and secondary school students, and fostering environmental stewardship in Bridgewater.

The Stiles and Hart Parkland Improvement Project Grant funds would go towards final engineering, design, permitting and construction of a robust in-town resource. The funds ensure that Stiles and Hart receives the improvements it needs, but also ensure that the parkland remains an important undeveloped area that will offset the adverse effects of climate change while allowing for ongoing recreational, terrestrial, and aquatic recreational activities in perpetuity.

I respectfully request that you consider the Town of Bridgewater's application for this very vital funding helping our community to continue to thrive and grow. Thank you for your time and deliberation over this matter. Please do not hesitate to contact my office with any questions or concerns.

Sincerely,

ANGELO D'EMILIA
State Representative
8th Plymouth

NATURAL RESOURCES TRUST of BRIDGEWATER

A local nonprofit focusing on Natural Resource Conservation

January 20, 2022

Division of Conservation Services
Melissa Cryan
100 Cambridge Street, 9th Floor
Boston, MA 02114

To the Grant Review Committee:

Representing the nonprofit Natural Resources Trust of Bridgewater, I am thrilled to support the Town of Bridgewater in their proposal to the Land & Water Conservation Fund for funding to upgrade and improve public access and the trail system in the Stiles & Hart Parkland in the center of Bridgewater's downtown business district.

This 80 + acre Stiles & Hart Parkland is bordered by over a mile of the Town River; its sloping woodlands are dotted with small ponds suitable for fishing, skating and swimming. Trail spurs connect this site to the Bay Circuit Trail to the north, and to Bridgewater State University to the south.

The Town River (a major tributary to the Wild & Scenic Taunton River) and the Bay Circuit Trail comprise the Nunckatessett Greenway, with land & water trails throughout West Bridgewater and Bridgewater that link the Hockomock Swamp ACEC to the Wild & Scenic Taunton River.

This 80+ acre recreational oasis in the heart of the downtown has always has an intriguing post-colonial history; once the home to the Plymouth County Agricultural Society Fairgrounds with a grandstand and trotting track, then a brick

manufacturing plant with a railroad link to regions beyond. And of course, the fishing and skinny dipping in the river and small ponds ....

The Natural Resources Trust of Bridgewater (NRTB) has championed this parkland since it was purchased 23 years ago. We provided the existing ecological studies, trail design plans, and management documents aimed to protect the ecology while encouraging recreational uses. Twice we sponsored the AmeriCorps to blaze trails, and we have fostered the connectivity of this parkland to a series of riverside parks & trails to form The Nunckatessett Greenway.

The Town of Bridgewater's 'Stiles & Hart Improvement Project Plan' incorporates two decades of work by town staff, volunteers, stakeholders, and consultants and forms the basis of this proposal aimed to address climate change resiliency while also establishing passive recreation activities for the residents of Bridgewater and elsewhere. The proposal centers around accessibility, expansion and improvement of existing trails and other resources, environmental education and fostering stewardship, which is already a well-known commodity in Bridgewater!

The Stiles & Hart Parkland Improvement Project Grant funds would go towards engineering, design, permitting and construction of a robust proposal, ensuring that this 80 + acre riverside parkland in the heart of Bridgewater's downtown business district receives the improvements to existing resources that it needs, while also ensuring that the parkland remains an important undeveloped wooded area that will certainly combat effects of climate change while allowing for ongoing land & water recreational activities in perpetuity.

The Natural Resources Trust of Bridgewater stands beside the Town of Bridgewater in their quest to make the Stiles & Hart Parkland a user-friendly parkland, a magnet of well-presented and maintained land & water trails connected to the Nunckatessett Greenway.

Sincerely,
Kitty Doherty, NRTB Project Coordinator

January 21, 2022

Melissa Cryan
Division of Conservation Services
Grant Review Committee
100 Cambridge Street, 9th Floor
Boston, MA 02114

Dear Ms. Cryan,

The Bridgewater Open Space Committee enthusiastically supports the Town of Bridgewater's proposal to the Land and Water Conservation Fund for funding for the "Stiles and Hart Parkland Improvement Project". The Stiles and Hart property is a significant parcel of undeveloped land in the center of town that has long been a part of Bridgewater's history and ecology. It currently lacks trails and other amenities that would allow the public to fully enjoy this significant natural resource. The grant funds requested would go a long way to making Stiles and Hart accessible and open to residents for limited hiking and recreation activities.

The Town of Bridgewater "Stiles and Hart Improvement Project Plan", which incorporates the work of town staff, stakeholders and consultants, forms the basis of this proposal to address climate change resiliency, while also providing passive recreation activities for the residents of Bridgewater and elsewhere. The proposal centers around accessibility, expansion and improvement of existing trails and other resources, environmental education, and fostering stewardship.

The 2017 Bridgewater Open Space and Recreation Plan includes recommendations for improvements at Stiles and Hart needed to promote public access and enjoyment of this property. https://www.bridgewaterma.org/DocumentCenter/View/2158/Bridgewater-OSRP-2017-Update_FINAL_FOR-STATE-APPROVAL_082018 (See pages 103-104.) One of the *"Objectives"* identified in the 2017 Plan is: *Promote passive recreational use of the Town's conservation areas by enhancing public accessibility, creating and maintaining trails and viewpoints, and increasing waterfront access.* The *Seven Year Action Plan* in the 2017 Plan identifies trails and other improvements at Stiles and Hart as action items needed to realize the Town's open space and passive recreation goals. The "Stiles and Hart Improvement Project Plan" is clearly consistent with the Town's Open Space Planning efforts. The preservation of this open space parcel will also mitigate climate change, which must be addressed at every level of government.

Thank you for consideration of our comments.

Respectfully,
For the Bridgewater Open Space Committee
Eileen Hiney, Chair

65 Ashtead Road
Bridgewater MA 02324
January 19, 2022

Letter of support for the Stiles & Hart Conservation Area

To Whom It May Concern:
The Stiles & Hart Conservation Area is absolutely stunning with the Town River running through it, several small ponds dotting the landscape, lots of history with clay mining to make bricks and an agricultural fair that used to be held on these grounds. The ruins of one of the buildings is actually still there. It is a jewel, just outside of the town center.

I am a resident of the Town of Bridgewater and an avid outdoors person. I have been helping build a bog bridge and keeping trails clear in the Stiles & Hart Conservation Area for the past couple years. I have recruited several friends to help along the way. We have spent many hours on maintenance and I know the park well.

The trails were sadly neglected for many years before I started volunteering. Many areas were seriously overgrown. The park lacks regular maintenance and since the October 26-27 storm the trails have become impassable due to several large downed trees. Other trails have had stream crossings fall into major disrepair so that trails are not complete.

Stiles & Hart is in desperate need of attention. It needs parking so people can actually come and enjoy it. It needs kiosks to show visitors they've arrived and where the trails and water are that await their enjoyment. It needs bridges to cross the many streams safely. It needs new trails blazed and old ones maintained so it's not an obstacle course when people walk. It needs picnic tables to enjoy the view. It needs benches to overlook the water and for people to rest. It needs signs to explain the history of this location so people appreciate it for what it was and is to become. It needs paths that aren't severely rutted so people in wheel chairs can come sit by the water and enjoy it. It needs fishing areas for families to come spend a day.

Stiles & Hart could use help from the Land and Water Conservation fund in the form of a grant to help accomplish this dream. Won't you please consider helping the Town of Bridgewater make this jewel shine?

Sincerely,

Monica Bentley

Monica Bentley

EDGEWOOD
Development Company, LLC

320 South Street | Plainville, MA 02762
T 508.643.2920 | F 508.643.0080

SMeltzer@edgewood-development.com

Via Email

January 19, 2022

Division of Conservation Services
Ms. Melissa Cryan
100 Cambridge Street, 9th Floor
Boston, MA 02114

Re: **Stiles and Hart Parkland Improvement Project – Letter of Support**

Dear Ms. Cryan and Member of the Grant Review Committee:

We are the owners of property within a short walking distance to the Stiles and Hart Parkland and are currently working with the owners of a larger parcel and with the Town boards in order to complete the redevelopment of an adjacent historic industrial property. Upon its completion, this redevelopment effort would bring new commercial activity and residential apartment dwellers within a stones throw of the Stiles and Hart Parkland. The proposed work would help provide invaluable recreational opportunities for the residents of the project as well as to the Bridgewater community generally. It will also provide a wonderful opportunity for continued ecological conservation and restoration and enjoyment of natural habitats.

Accordingly and without reservation, we are writing to support the Town of Bridgewater in their proposal to the Land and Water Conservation Fund for funding in relation to the "Stiles and Hart Parkland Improvement Project". Stiles and Hart has always been a part of Bridgewater in terms of history, ecology, and recreational uses. This would go a long way to making Stiles and Hart a well utilized and valuable resource that is already readily accessible and open to residents for limited hiking and recreation activities.

The Town of Bridgewater "Stiles and Hart Improvement Project Plan," which incorporates the work of town staff, stakeholders and consultants forms the basis of this proposal to address climate change resiliency while also establishing passive recreation activities for the residents of Bridgewater and elsewhere. The proposal centers around accessibility, expansion and improvement of existing trails and other resources, environmental education and fostering stewardship, which is already a well-known commodity in Bridgewater.

We understand that the Stiles and Hart Parkland Improvement Project Grant funds would go towards engineering, design, permitting and construction of a robust proposal that would go a long way to ensuring that Stiles and Hart receives the improvement of existing resources it needs, but also ensuring

that the parkland remains an important undeveloped area that will certainly combat effects of heat islands, climate change while allowing for ongoing recreational terrestrial and aquatic recreational activities in perpetuity.

Thank you for your consideration. Please contact me if I can provide any additional information.

Very truly yours,

Stephen E. Meltzer
Vice President of Project Development

SEM:fhs

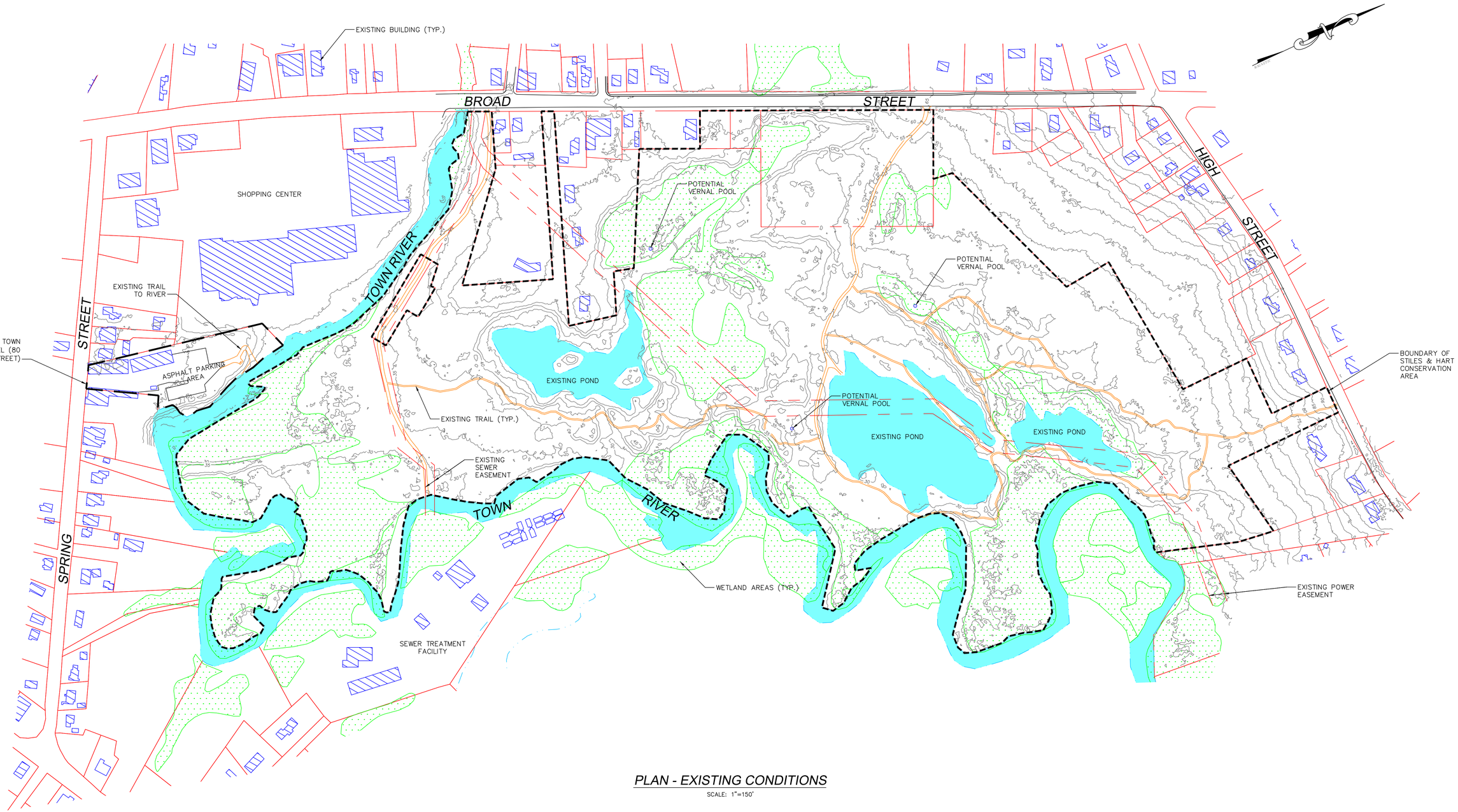

PLAN - EXISTING CONDITIONS

SCALE: 1"=150'

NOTES:

1. PROPERTY LINE AND EASEMENT INFORMATION FOR STILES & HART PARCELS TAKEN FROM "PLAN OF LAND ON BROAD STREET AND HIGH STREET IN BRIDGEWATER, MASSACHUSETTS", DATED MAY 24, 1999, BY OUTBACK ENGINEERING, INC.
2. OTHER PARCEL DATA FROM MassGIS ASSESSOR'S PARCELS SHAPE FILES.
3. BUILDINGS/STRUCUTRES FROM MassGIS STRUCTURES DATALAYER.
4. TOPOGRAPHY FROM NOAA 2013–2014 POST–SANDY LiDAR INFORMATION. DATUM IS NAVD 1988.
5. WETLANDS POLYGONS FROM MassDEP WETLANDS DATALAYER ON THE MassGIS WEBSITE.
6. EXISTING TRAILS MAPPED BY AMORY ENGINEERS, P.C., JANUARY 13, 2022.

PRELIMINARY

FOR GRANT APPLICATION AND PERMITTING PURPOSES ONLY
NOT INTENDED TO BE USED FOR CONSTRUCTION

REVISIONS

NO.	ITEM	DATE
1.	ISSUED FOR GRANT APPLICATION	1/20/22

AMORY ENGINEERS, P.C.
COMMONWEALTH OF MASSACHUSETTS
PATRICK G. BRENNAN
CIVIL
No. 41489
REGISTERED PROFESSIONAL ENGINEER
DATE: JANUARY 20, 2022

AMORY ENGINEERS, P.C.
DUXBURY, MASSACHUSETTS

DRAWN BY:	PGB	FILE NAME:	AS SHOWN	SCALE:	AS SHOWN
DESIGNED BY:	PGB	JOB NO.:	**	DWG. NO.:	--
CHECKED BY:	RSJ	DATE:	1/20/22	CONTRACT:	--

CONSERVATION DEPARTMENT
BRIDGEWATER, MASSACHUSETTS

IMPROVEMENTS TO STILES & HART CONSERVATION AREA
EXISTING CONDITIONS
OVERALL PLAN OF PARK

CIVIL

SHEET 1 OF 5

C:\Users\gbrennan\appdata\local\temp\AcPublish_7672\
Stiles & Hart Park.dwg

COPYRIGHT © BY AMORY ENGINEERS, P.C.
NO PART OF THIS DOCUMENT MAY BE REPRODUCED, STORED IN A RETRIEVAL SYSTEM, OR TRANSMITTED IN ANY FORM OR BY ANY MEANS, ELECTRONIC, MECHANICAL, PHOTOCOPYING, RECORDING OR OTHERWISE, WITHOUT THE EXPRESS WRITTEN CONSENT OF AMORY ENGINEERS, P.C. WITH THE EXCEPTION OF ANY REGULATORY AUTHORITY WHICH MAY REPRODUCE IT IN CONJUNCTION WITH THE PERFORMANCE OF OFFICIAL BUSINESS UNDER ITS JURISDICTION. ANY MODIFICATION MADE TO THIS DOCUMENT WITHOUT THE EXPRESS WRITTEN CONSENT OF AMORY ENGINEERS, P.C. SHALL RENDER IT UNUSABLE.

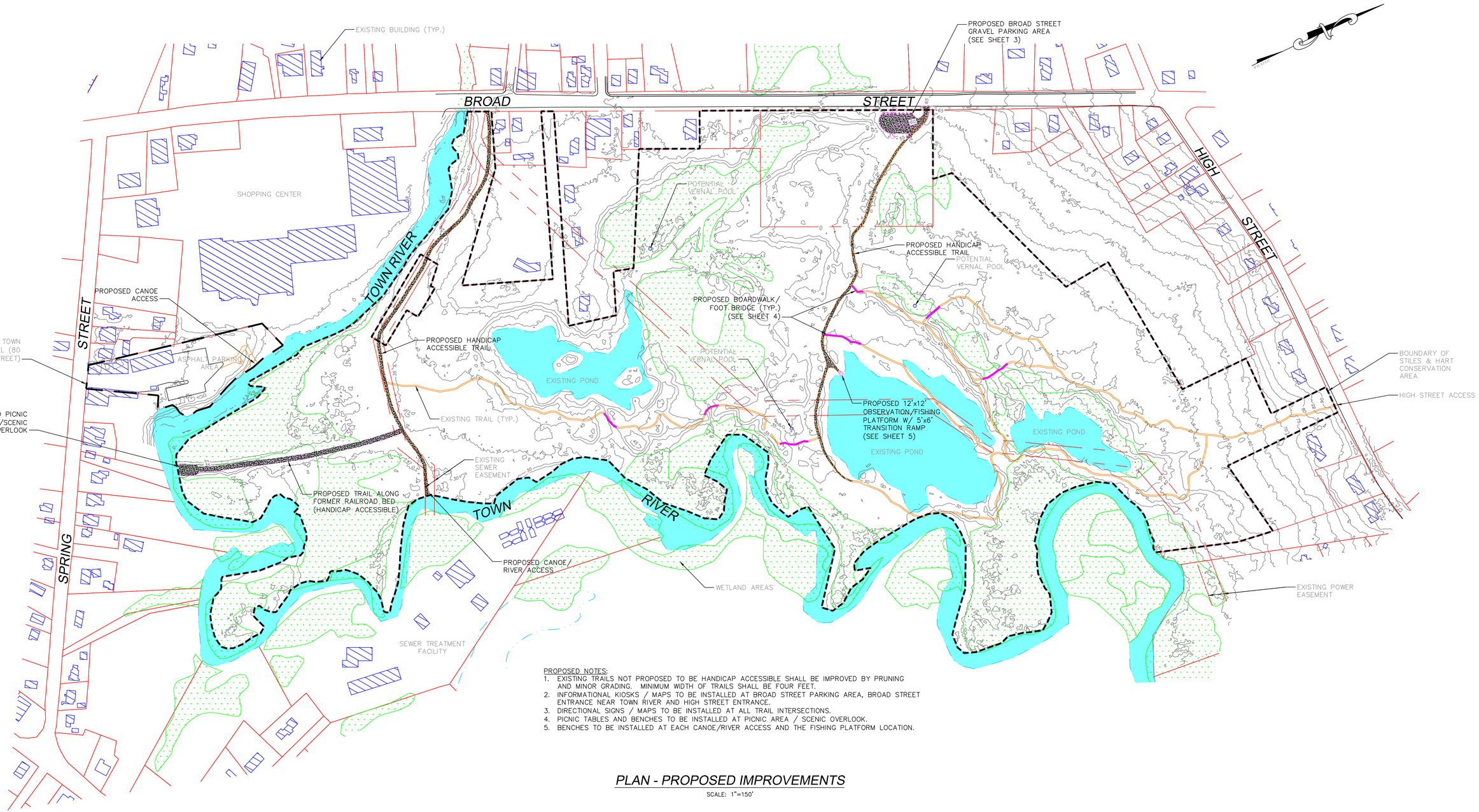

PROPOSED NOTES:

1. EXISTING TRAILS NOT PROPOSED TO BE HANDICAP ACCESSIBLE SHALL BE IMPROVED BY PRUNING AND MINOR GRADING. MINIMUM WIDTH OF TRAILS SHALL BE FOUR FEET.
2. INFORMATIONAL KIOSKS / MAPS TO BE INSTALLED AT BROAD STREET PARKING AREA, BROAD STREET ENTRANCE NEAR TOWN RIVER AND HIGH STREET ENTRANCE.
3. DIRECTIONAL SIGNS / MAPS TO BE INSTALLED AT ALL TRAIL INTERSECTIONS.
4. PICNIC TABLES AND BENCHES TO BE INSTALLED AT PICNIC AREA / SCENIC OVERLOOK.
5. BENCHES TO BE INSTALLED AT EACH CANOE/RIVER ACCESS AND THE FISHING PLATFORM LOCATION.

PLAN - PROPOSED IMPROVEMENTS

SCALE: 1"=150'

MAPPING NOTES:

1. PROPERTY LINE AND EASEMENT INFORMATION FOR STILES & HART PARCELS TAKEN FROM "PLAN OF LAND ON BROAD STREET AND HIGH STREET IN BRIDGEWATER, MASSACHUSETTS", DATED MAY 24, 1999, BY OUTBACK ENGINEERING, INC.
2. OTHER PARCEL DATA FROM MassGIS ASSESSOR'S PARCELS SHAPE FILES.
3. BUILDINGS/STRUCUTRES FROM MassGIS STRUCTURES DATALAYER.
4. TOPOGRAPHY FROM NOAA 2013–2014 POST–SANDY LiDAR INFORMATION. DATUM IS NAVD 1988.
5. WETLANDS POLYGONS FROM MassDEP WETLANDS DATALAYER ON THE MassGIS WEBSITE.
6. EXISTING TRAILS MAPPED BY AMORY ENGINEERS, P.C., JANUARY 13, 2022.

PRELIMINARY

FOR GRANT APPLICATION AND PERMITTING PURPOSES ONLY NOT INTENDED TO BE USED FOR CONSTRUCTION

REVISIONS

NO.	ITEM	DATE
1.	ISSUED FOR GRANT APPLICATION	1/20/22

AMORY ENGINEERS, P.C.
COMMONWEALTH OF MASSACHUSETTS
PATRICK G. BRENNAN
CIVIL
No. 41489
REGISTERED PROFESSIONAL ENGINEER
DATE: JANUARY 20, 2022

AMORY ENGINEERS, P.C.
DUXBURY, MASSACHUSETTS

CONSERVATION DEPARTMENT
BRIDGEWATER, MASSACHUSETTS

CIVIL

DRAWN BY:	PGB	FILE NAME:	AS SHOWN	SCALE:	AS SHOWN
DESIGNED BY:	PGB	JOB NO.:	**	DWG. NO.:	--
CHECKED BY:	RSJ	DATE:	1/20/22	CONTRACT:	--

IMPROVEMENTS TO STILES & HART CONSERVATION AREA
PROPOSED IMPROVEMENTS
OVERALL PLAN OF PARK

SHEET 2 OF 5

C:\Users\gbrennan\appdata\local\temp\AcPublish_7672\
Stiles & Hart Park.dwg

COPYRIGHT © BY AMORY ENGINEERS, P.C.
NO PART OF THIS DOCUMENT MAY BE REPRODUCED, STORED IN A RETRIEVAL SYSTEM, OR TRANSMITTED IN ANY FORM OR BY ANY MEANS, ELECTRONIC, MECHANICAL, PHOTOCOPYING, RECORDING OR OTHERWISE, WITHOUT THE EXPRESS WRITTEN CONSENT OF AMORY ENGINEERS, P.C. WITH THE EXCEPTION OF ANY REGULATORY AUTHORITY WHICH MAY REPRODUCE IT IN CONJUNCTION WITH THE PERFORMANCE OF OFFICIAL BUSINESS UNDER ITS JURISDICTION. ANY MODIFICATION MADE TO THIS DOCUMENT WITHOUT THE EXPRESS WRITTEN CONSENT OF AMORY ENGINEERS, P.C. SHALL RENDER IT UNUSABLE.

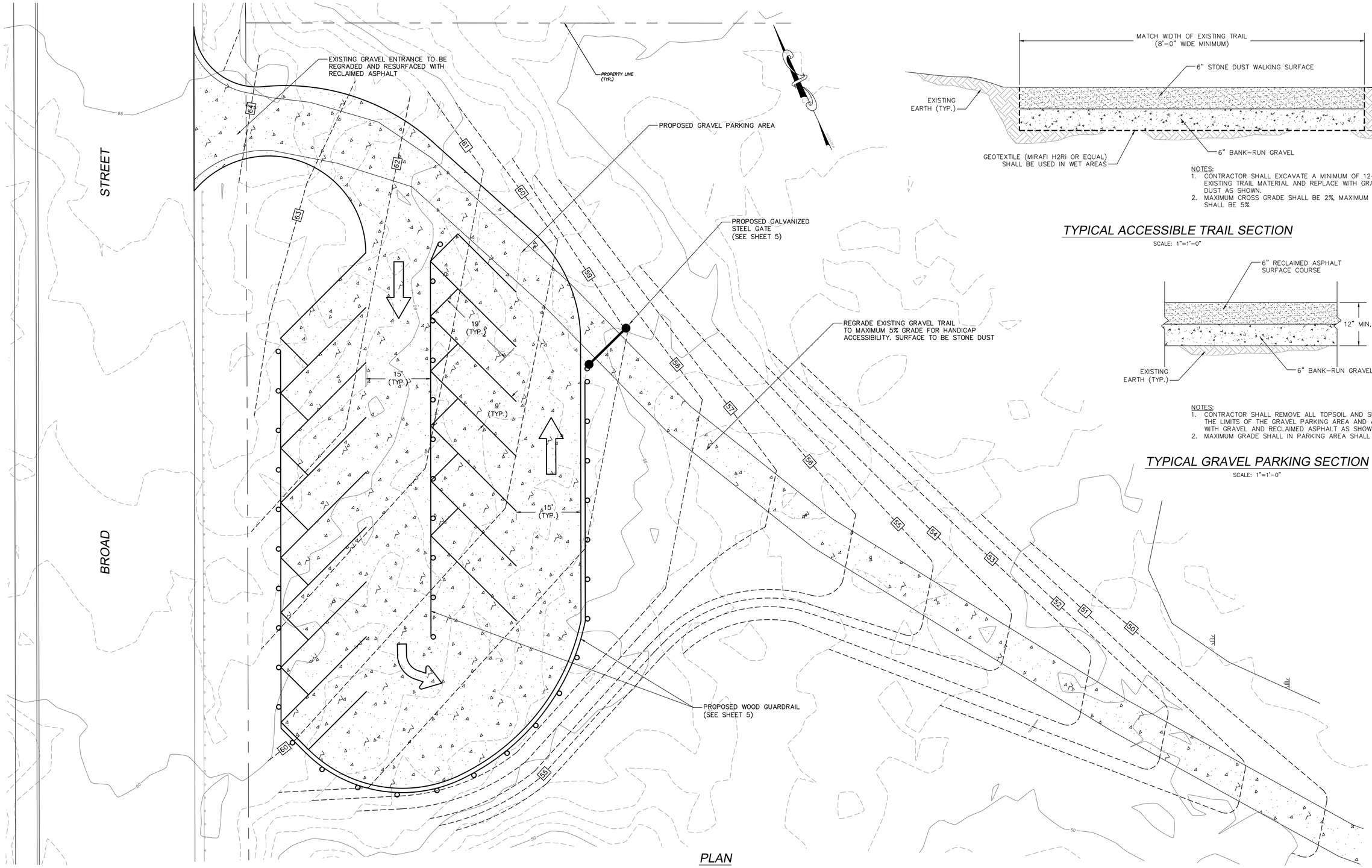

PLAN

SCALE: 1"=10'

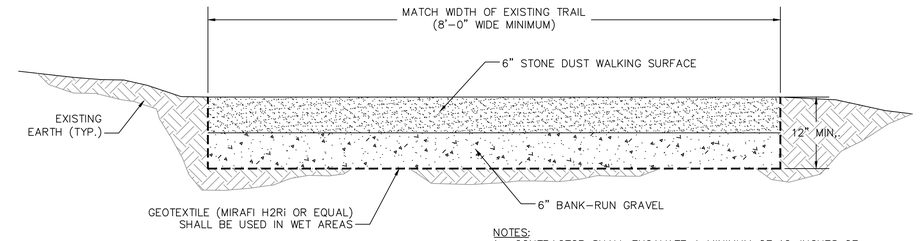

NOTES:
1. CONTRACTOR SHALL EXCAVATE A MINIMUM OF 12-INCHES OF EXISTING TRAIL MATERIAL AND REPLACE WITH GRAVEL AND STONE DUST AS SHOWN.
2. MAXIMUM CROSS GRADE SHALL BE 2%, MAXIMUM RUNNING GRADE SHALL BE 5%.

TYPICAL ACCESSIBLE TRAIL SECTION

SCALE: 1"=1'-0"

NOTES:
1. CONTRACTOR SHALL REMOVE ALL TOPSOIL AND SUBSOIL WITHIN THE LIMITS OF THE GRAVEL PARKING AREA AND AND REPLACE WITH GRAVEL AND RECLAIMED ASPHALT AS SHOWN.
2. MAXIMUM GRADE SHALL IN PARKING AREA SHALL BE 5%.

TYPICAL GRAVEL PARKING SECTION

SCALE: 1"=1'-0"

PRELIMINARY

FOR GRANT APPLICATION AND PERMITTING PURPOSES ONLY NOT INTENDED TO BE USED FOR CONSTRUCTION

REVISIONS

NO.	ITEM	DATE
1.	ISSUED FOR GRANT APPLICATION	1/20/22

AMORY ENGINEERS, P.C.
COMMONWEALTH OF MASSACHUSETTS
PATRICK G. BRENNAN
CIVIL
No. 41489
REGISTERED PROFESSIONAL ENGINEER
DATE: JANUARY 20, 2022

AMORY ENGINEERS, P.C.
DUXBURY, MASSACHUSETTS

DRAWN BY:	PGB	FILE NAME:	AS SHOWN	SCALE:	AS SHOWN
DESIGNED BY:	PGB	JOB NO.:	**	DWG. NO.:	--
CHECKED BY:	RSJ	DATE:	1/20/22	CONTRACT:	--

CONSERVATION DEPARTMENT
BRIDGEWATER, MASSACHUSETTS

IMPROVEMENTS TO STILES & HART CONSERVATION AREA
BROAD STREET PARKING AREA & ACCESSIBLE TRAIL - PLAN & SECTIONS

CIVIL

SHEET 3 OF 5

C:\Users\pbrennan\appdata\local\temp\AcPublish_13004\Stiles & Hart Park.dwg

COPYRIGHT © BY AMORY ENGINEERS, P.C.
NO PART OF THIS DOCUMENT MAY BE REPRODUCED, STORED IN A RETRIEVAL SYSTEM, OR TRANSMITTED IN ANY FORM OR BY ANY MEANS, ELECTRONIC, MECHANICAL, PHOTOCOPYING, RECORDING OR OTHERWISE, WITHOUT THE EXPRESS WRITTEN CONSENT OF AMORY ENGINEERS, P.C. WITH THE EXCEPTION OF ANY REGULATORY AUTHORITY WHICH MAY REPRODUCE IT IN CONJUNCTION WITH THE PERFORMANCE OF OFFICIAL BUSINESS UNDER ITS JURISDICTION. ANY MODIFICATION MADE TO THIS DOCUMENT WITHOUT THE EXPRESS WRITTEN CONSENT OF AMORY ENGINEERS, P.C. SHALL RENDER IT UNUSABLE.

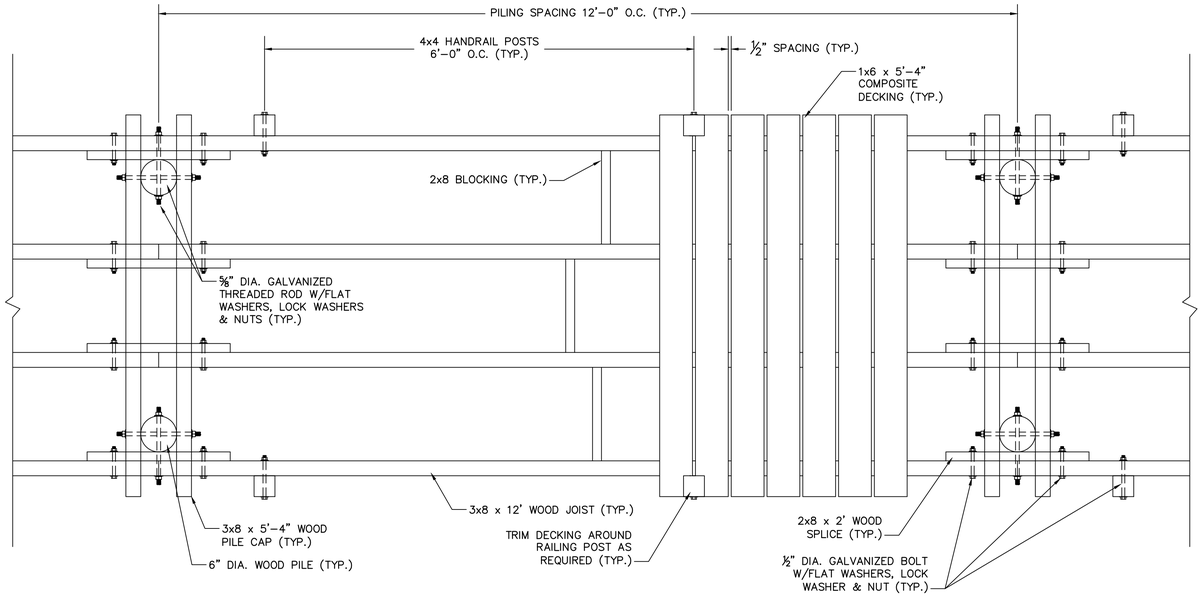

FRAMING PLAN

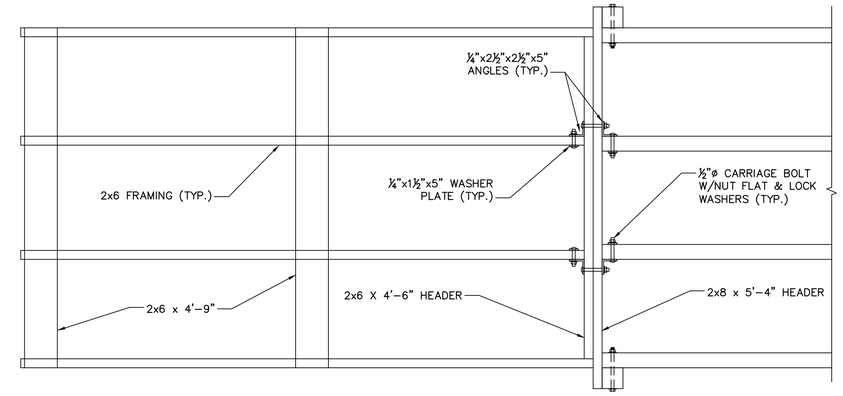

FRAMING PLAN

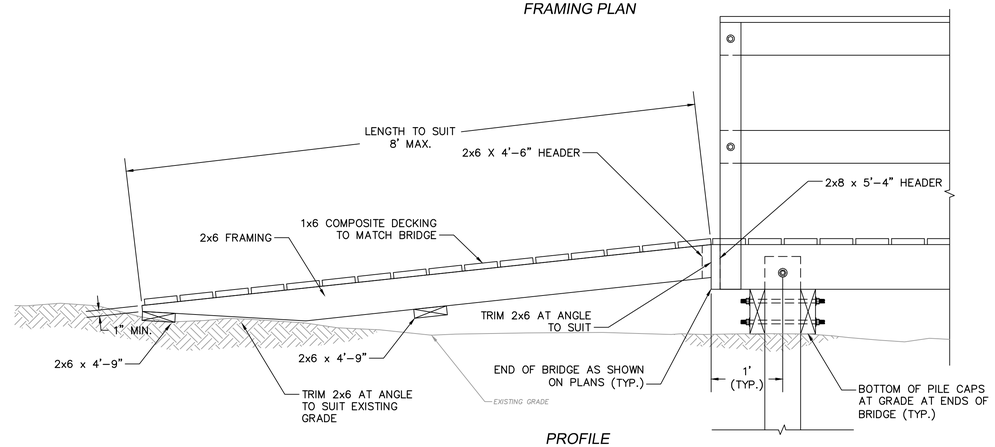

PROFILE

END RAMP DETAILS

SCALE: 1" = 1'-0"

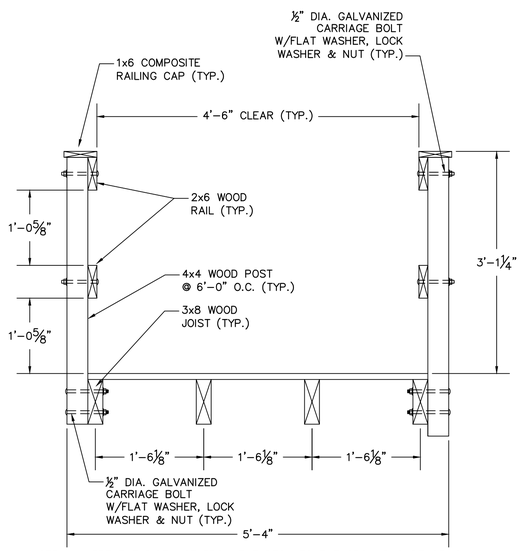

NOTE: WHERE THE DISTANCE FROM THE DECK TO THE GROUND SURFACE IS LESS THAN 1'-6":
1. RAILINGS ARE NOT REQUIRED.
2. 4x4 POSTS MAY BE SUBSTITUTED FOR THE PILINGS.
3. 2x4 TOE RAILS SHALL BE INSTALLED (SEE PLATFORM PROFILE, SHEET 5).

RAILING CONNECTION

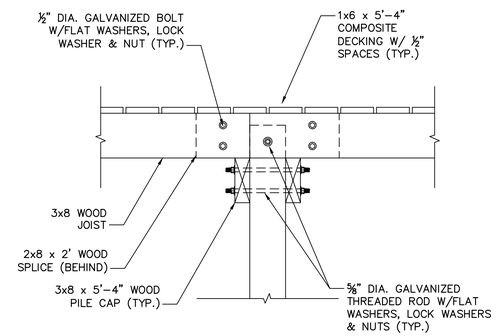

PROFILE

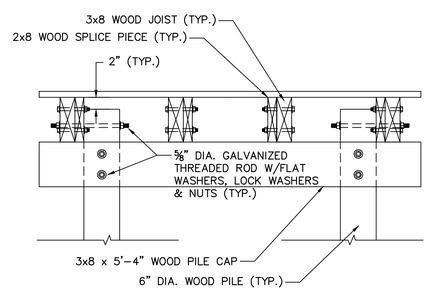

SECTION

PILE CONNECTION DETAILS

BRIDGE DETAILS

SCALE: 1" = 1'-0"

CONSTRUCTION NOTES

1. ALL WOOD COMPONENTS ARE TO BE PRESSURE TREATED (ACQ – ALKALINE COPPER QUATERNARY 0.60 PCF RETENTION OR CA–B COPPER AZOLE 0.31 PCF RETENTION) WOOD MEMBERS, EASTERN WHITE PINE OR SOUTHERN YELLOW PINE, NO. 1 STRUCTURAL, SURFACES FOUR SIDES (S4S). PRESERVATIVE TREATMENT SHALL BE TO AWPA STANDARDS C–3 AND C–18 (USE CATEGORY 5A).
2. ALL WOOD PILES ARE TO BE PRESSURE TREATED (ACQ – ALKALINE COPPER QUATERNARY 0.60 PCF RETENTION OR CA–B COPPER AZOLE 0.31 PCF RETENTION) WOOD, EASTERN WHITE PINE OR SOUTHERN YELLOW PINE, NO. 2 STRUCTURAL. PRESERVATIVE TREATMENT SHALL BE TO AWPA STANDARDS C–3 AND C–18 (USE CATEGORY 5A).
3. WOOD PILES SHALL BE DRIVEN TO 4 TO 5 FT. OF BEARING OR REFUSAL.
4. 6"x6" SQUARE WOOD PILES MAY BE USED IN LIEU OF ROUND PILES AT NO ADDITIONAL COST TO THE OWNER.
5. ALL HARDWARE IS TO BE HOT–DIPPED GALVANIZED CONFORMING TO ASTM–A153 (FASTENERS) OR ASTM–A653 AND –A123 (CONNECTOR AND SHEET PRODUCTS).
6. ALL ANGLES, WASHER PLATES, OUTSIDE CORNER BRACKETS, INSIDE CORNER BRACKETS, MALE & FEMALE T–CONNECTORS SHALL BE STANDARD ITEMS AS MANUFACTURED BY PERMAFLOAT, PLAYSTAR, MULTINAUTIC OR EQUAL.
7. ALL NAILS SHALL BE HOT–DIPPED GALVANIZED TO ASTM–A153.
8. RAILING CAPS AND BRIDGE DECKING SHALL BE SECURED BY STAINLESS STEEL SCREWS.

PRELIMINARY

FOR GRANT APPLICATION AND PERMITTING PURPOSES ONLY NOT INTENDED TO BE USED FOR CONSTRUCTION

REVISIONS

NO.	ITEM	DATE
1.	ISSUED FOR GRANT APPLICATION	1/20/22

AMORY ENGINEERS, P.C.
COMMONWEALTH OF MASSACHUSETTS
PATRICK G. BRENNAN
CIVIL
No. 41489
REGISTERED PROFESSIONAL ENGINEER
DATE: JANUARY 20, 2022

AMORY ENGINEERS, P.C.
DUXBURY, MASSACHUSETTS

DRAWN BY:	PGB	FILE NAME:	AS SHOWN	SCALE:	AS SHOWN
DESIGNED BY:	PGB	JOB NO.:	**	DWG. NO.:	--
CHECKED BY:	RSJ	DATE:	1/20/22	CONTRACT:	--

CONSERVATION DEPARTMENT
BRIDGEWATER, MASSACHUSETTS

IMPROVEMENTS TO STILES & HART CONSERVATION AREA
FOOTBRIDGE / BOARDWALK
PLANS, SECTIONS & DETAILS

CIVIL

SHEET 4 OF 5

C:\Users\pbrennan\appdata\local\temp\AcPublish_7672\Stiles & Hart Park.dwg

COPYRIGHT © BY AMORY ENGINEERS, P.C.
NO PART OF THIS DOCUMENT MAY BE REPRODUCED, STORED IN A RETRIEVAL SYSTEM, OR TRANSMITTED IN ANY FORM OR BY ANY MEANS, ELECTRONIC, MECHANICAL, PHOTOCOPYING, RECORDING OR OTHERWISE, WITHOUT THE EXPRESS WRITTEN CONSENT OF AMORY ENGINEERS, P.C. WITH THE EXCEPTION OF ANY REGULATORY AUTHORITY WHICH MAY REPRODUCE IT IN CONJUNCTION WITH THE PERFORMANCE OF OFFICIAL BUSINESS UNDER ITS JURISDICTION. ANY MODIFICATION MADE TO THIS DOCUMENT WITHOUT THE EXPRESS WRITTEN CONSENT OF AMORY ENGINEERS, P.C. SHALL RENDER IT UNUSABLE.

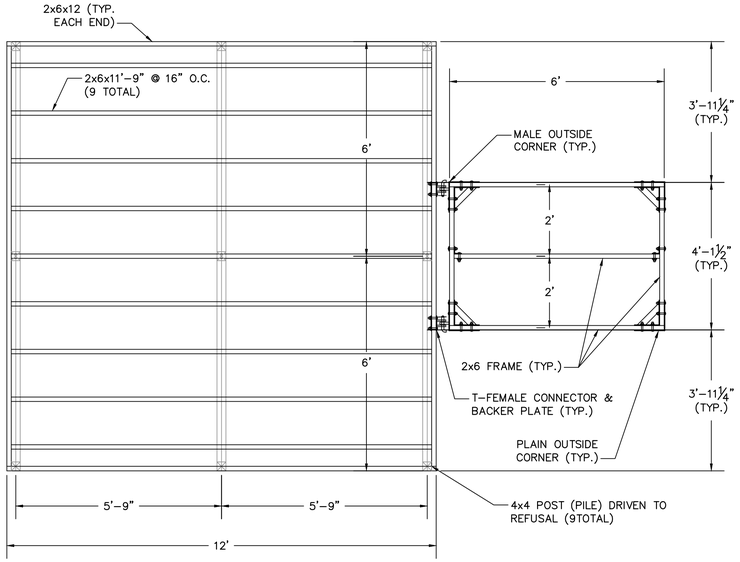

PLATFORM FRAMING PLAN

SCALE: 1/2" = 1'-0"

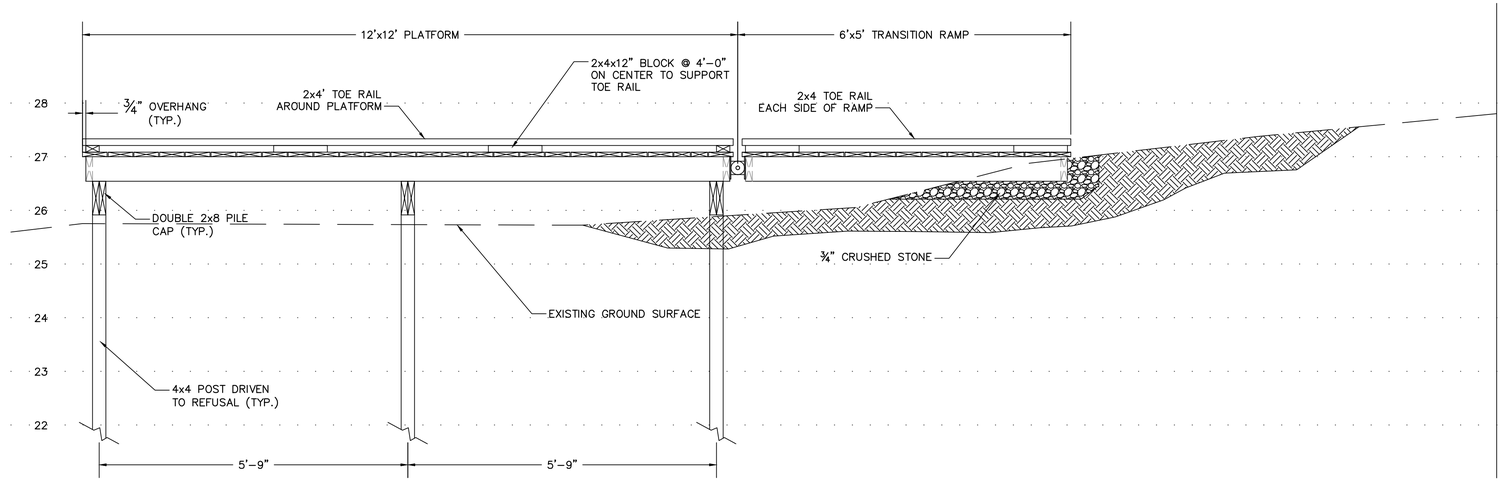

PLATFORM PROFILE

SCALE: 3/4" = 1'-0"

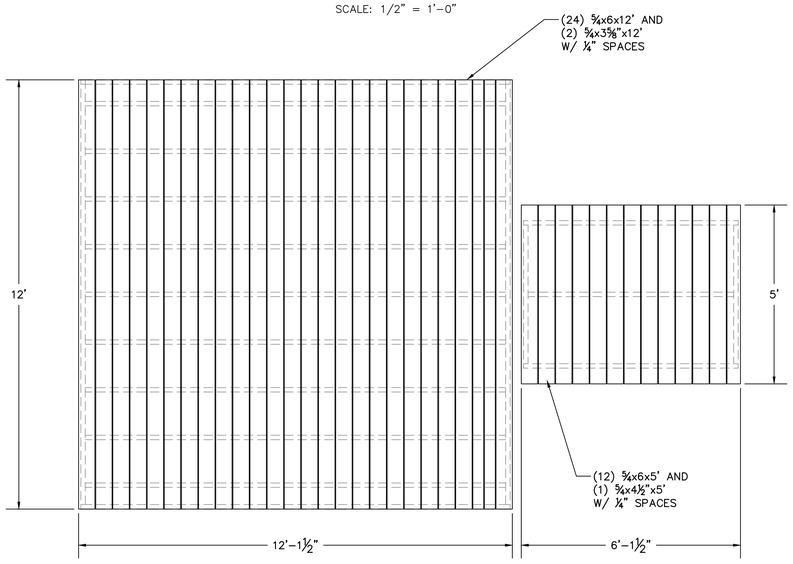

PLATFORM DECKING PLAN

SCALE: 1/2" = 1'-0"

NOTES:

1. ALL LUMBER SHALL BE PRESSURE TREATED (ACQ – ALKALINE COPPER QUATERNARY 0.60 PCF RETENTION OR CA–B COPPER AZOLE 0.31 PCF RETENTION) EASTERN WHITE PINE OR SOUTHERN YELLOW PINE, NO. 1 STRUCTURAL, SURFACED FOUR SIDES. PRESERVATIVE TREATMENT SHALL BE TO AWPA STANDARDS C–3 AND C–18 (USE CATEGORY 5A).
2. ALL HARDWARE SHALL BE HOT DIPPED GALVANIZED CONFORMING TO ASTM–A153 (FASTENERS) OR ASTM–A653 AND –A123 (CONNECTOR AND SHEET PRODUCTS).
3. ALL ANGLES, WASHER PLATES, OUTSIDE CORNER BRACKETS, INSIDE CORNER BRACKETS, MALE & FEMALE T–CONNECTORS SHALL BE STANDARD ITEMS AS MANUFACTURED BY PERMAFLOAT, PLAYSTAR, MULTINAUTIC OR EQUAL.
4. EACH PILE TO PILE CAP CONNECTION SHALL BE MADE WITH SIMPSON STRONG–TIE MODEL BC4Z POST CAPS (9 TOTAL).
5. PILE CAP TO FRAME CONNECTIONS SHALL BE MADE WITH SIMPSON STRONG–TIE MODEL H2.5A HURRICANE TIES (36 TOTAL).

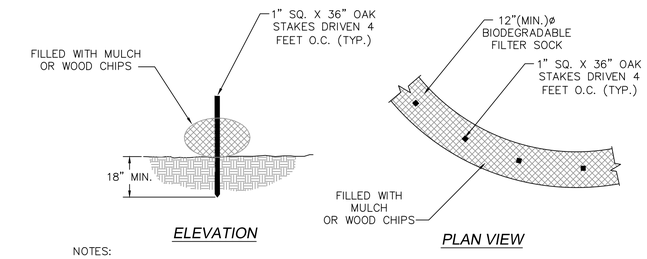

NOTES:

1. FILTER SOCK SHALL BE PLACED PRIOR TO START OF WORK.
2. OAK STAKES SHALL BE DRIVEN AT LEAST 18" MIN. INTO NATIVE SOIL.
3. FILTER SOCK SHALL BE PLACED AT THE LOCATIONS SHOWN BEFORE ANY EXCAVATION OR EARTH MOVING OPERATIONS.

FILTER SOCK DETAIL

NOT TO SCALE

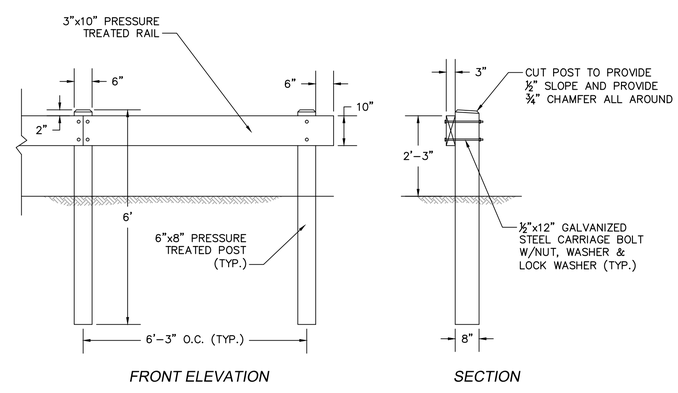

WOOD GUARDRAIL DETAILS

SCALE: 1/2"=1'-0"

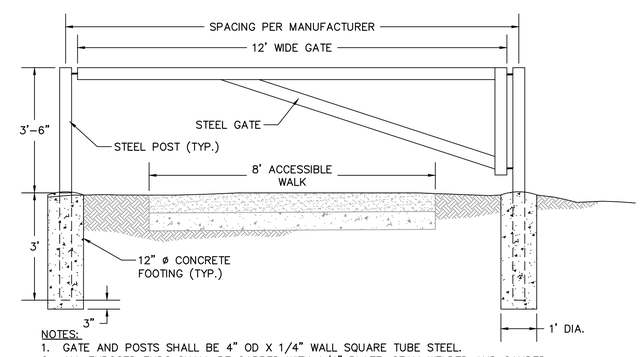

NOTES:

1. GATE AND POSTS SHALL BE 4" OD X 1/4" WALL SQUARE TUBE STEEL.
2. ALL EXPOSED ENDS SHALL BE CAPPED WITH 1/4" PLATE, SEAM WELDED AND SANDED SMOOTH.
3. FURNISH WITH LOCK ASSEMBLY AND TAMPER–PROOF HINGES.
4. ENTIRE ASSEMBLY SHALL BE HOT–DIPPED GALVANIZED.

GALVANIZED GATE DETAIL

SCALE: 1/2"=1'-0"

PRELIMINARY

FOR GRANT APPLICATION AND PERMITTING PURPOSES ONLY NOT INTENDED TO BE USED FOR CONSTRUCTION

REVISIONS

NO.	ITEM	DATE
1.	ISSUED FOR GRANT APPLICATION	1/20/22

AMORY ENGINEERS, P.C.
COMMONWEALTH OF MASSACHUSETTS
PATRICK G. BRENNAN
CIVIL
No. 41489
REGISTERED PROFESSIONAL ENGINEER
DATE: JANUARY 20, 2022

AMORY ENGINEERS, P.C.
DUXBURY, MASSACHUSETTS

DRAWN BY:	PGB	FILE NAME:	AS SHOWN	SCALE:	AS SHOWN
DESIGNED BY:	PGB	JOB NO.:	**	DWG. NO.:	--
CHECKED BY:	RSJ	DATE:	1/20/22	CONTRACT:	--

CONSERVATION DEPARTMENT
BRIDGEWATER, MASSACHUSETTS

IMPROVEMENTS TO STILES & HART CONSERVATION AREA
OBSERVATION / FISHING PLATFORM
PLANS, PROFILE & DETAILS

CIVIL

SHEET 5 OF 5

C:\Users\pbrennan\appdata\local\temp\AcPublish_13004\Stiles & Hart Park.dwg

COPYRIGHT © BY AMORY ENGINEERS, P.C.
NO PART OF THIS DOCUMENT MAY BE REPRODUCED, STORED IN A RETRIEVAL SYSTEM, OR TRANSMITTED IN ANY FORM OR BY ANY MEANS, ELECTRONIC, MECHANICAL, PHOTOCOPYING, RECORDING OR OTHERWISE, WITHOUT THE EXPRESS WRITTEN CONSENT OF AMORY ENGINEERS, P.C. WITH THE EXCEPTION OF ANY REGULATORY AUTHORITY WHICH MAY REPRODUCE IT IN CONJUNCTION WITH THE PERFORMANCE OF OFFICIAL BUSINESS UNDER ITS JURISDICTION. ANY MODIFICATION MADE TO THIS DOCUMENT WITHOUT THE EXPRESS WRITTEN CONSENT OF AMORY ENGINEERS, P.C. SHALL RENDER IT UNUSABLE.

Improvements to Stiles & Hart Conservation Area

Cost Estimate

Item	Quantity		Unit Price		Cost
Footbridge/boardwalk	565	l.f.	$ 470.00	$	265,550.00
Observation Platform	1		$ 21,500.00	$	21,500.00
Accessible trails:					
Earth excavation	1,500	c.y.	$ 48.00	$	72,000.00
Fine grade & compact	4,500	s.y.	$ 8.00	$	36,000.00
Gravel	750	c.y.	$ 55.00	$	41,250.00
Stone dust	1,110	ton	$ 85.00	$	94,350.00
Geotextile	2,250	s.y.	$ 8.00	$	18,000.00
Existing trails:					
Clearing/trimming	7,000	l.f.	$ 17.65	$	123,550.00
Parking Area:					
Clearing	0.55	acre	$ 44,000.00	$	24,200.00
Earth excavation	830	c.y.	$ 48.00	$	39,840.00
Fine grade & compact	2,500	s.y.	$ 8.00	$	20,000.00
Gravel	600	c.y.	$ 55.00	$	33,000.00
Reclaimed asphalt	170	c.y.	$ 65.50	$	11,135.00
Guardrail	340	l.f.	$ 60.00	$	20,400.00
Gate	1	each	$ 7,500.00	$	7,500.00
Ammenities:					
Picnic tables	2	each	$ 3,200.00	$	6,400.00
Benches	10	each	$ 3,000.00	$	30,000.00
Kiosks / signs	16	each	$ 2,000.00	$	32,000.00
			Construction Total:	$	896,675.00
			20% Engineering & Contingency:	$	179,335.00
			Project Total:	**$**	**1,076,010.00**